Frode Pedersen temperature sensors

Thermocouple assembly A

with interchangeable measuring insert

Data sheet 1301

Application

- Measurement of temperature in ducts and furnaces with air and flue gasses
- The operating range is up to 800°C in the low-pressure range
- Fields of application
  - Power plants
  - Incinerators
  - Chemical process engineering

Technical features

- Thermocouple type J, K and N acc. to IEC 584-1 (EN60584-1)
- Built acc. to DIN 43764
- Connected to the process by adjustable flange or compression fittings
- The measuring insert can be exchanged or calibrated without closing down the process
- Protective tube in stainless and acid proof steel
- Modular design and standard length minimize the necessary number of spares
- Optionally, can be supplied with head mounted transmitter

Ordering

The requested sensor is selected from the table below
The colour code means:

Standard: Built of standard modules (short delivery time)

Variant: Modified standard modules

We are specialist in temperature measurement.
Please contact us and we will do our best to solve your specific measuring task

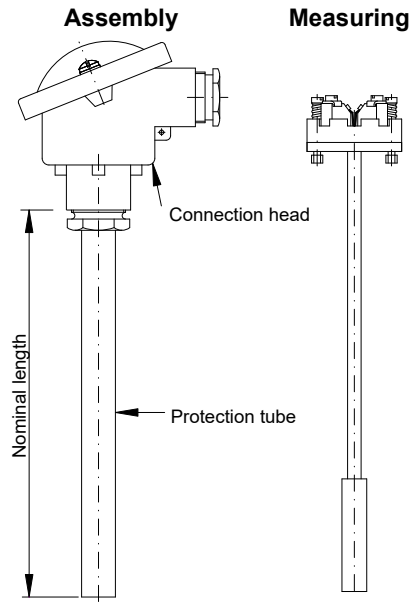

Ordering information

Sensor | **Transmitter**

Specification number 1301- [ ][ ][ ][ ][ ][ ][ ][ ][ ][ ][ ][ ] **4mA:** °C **20mA:** °C 4)

Protective tube

Stainless, acid proof steel,W.no.1.4571 (AISI 316Ti)
Max. 800°C

15mm OD. 1.5 mm wall	0

Nominal length (mm)

500	0500
710	0710
1000	1000
1400	1400
2000	2000
Interim lengths (Min.100, max. 3000)	xxxx

Process connection (see page 2)

None		0
Fig. 1	Adjustable flange	1
Fig. 1+2	Adjustable flange + counter flange	2
Fig. 3	3/4" BSP compression fitting w/teflon ferrule sealing	3

Connection head

B:	Degree of protection IP 54	0
BHS:	Degree of protection IP 65	1
BHSH:	Degree of protection IP 65, high cap for transmitter	2
B:	Degree of protection IP 54, BHX high cap for tranmitter	3

Electrical connection

0	Terminalblock with screws
1	Transmitter FPTU galvanic isolated.
3	Transmitter FPTU galvanic isolated. EEXiaIICT4/6.
a	Transmitter FPTT galvanic isolated.
c	Transmitter FPTT galvanic isolated. EEXiaIICT4/6.
d	Transmitter FPTH, galvanic isolated. Hart/SIL.
e	Transmitter FPTH, galvanic isolated. Hart/SIL.EEXiaIICT4/6.
9	None. Without terminal block, flying ends for transmitter

Note 4: Please specify measuring range in °C

Tolerance acc to IEC 584-1 (EN60584-1)

0	Class 2, for J, K and N, i.e. ±2.5°C or 0.0075 x t_{actual} (°C) 3)
1	Class 1, for J, K and N, i.e. ±1.5°C or 0.0040 x t_{actual} (°C) 3)

Note 3: The highest value apply

Number of thermocouples

0	1
1	2

Measuring insert

0	TK80
1	TK115
2	TK125

Model	Thermocouple	Type	Diam./type	Max. temperature 1) Continuously
TK80	Fe-CuNi	J	6 MI 2)	800°C
TK115	NiCr-Ni	K	6 MI 2)	1000°C
TK125	Nicrosil-Nisil	N	6 MI 2)	1100°C

Note 1: The values apply for the thermocouple.
Note 2: MI= Mineral insulated.

Accesesories

Process connection: See data sheet 9113
Transmitter: See data sheet 9168

AMETEK®
SENSORS, TEST & CALIBRATION

TECHNICAL DATA

All dimensions in mm

Dimensions

Assembly
Connection head

Type B / B+BHX Cap (for transmitter)

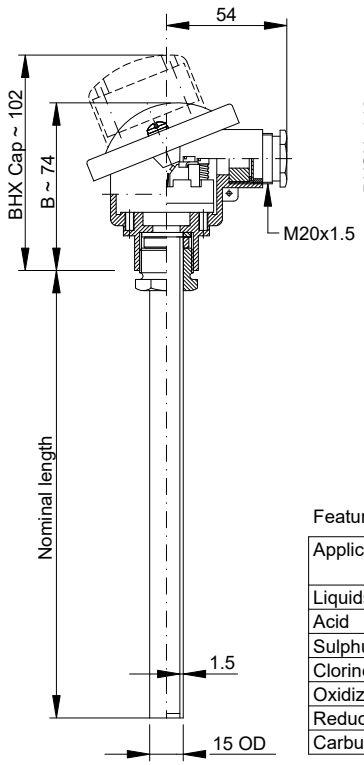

Type BHS / BHSH (for transmitter)

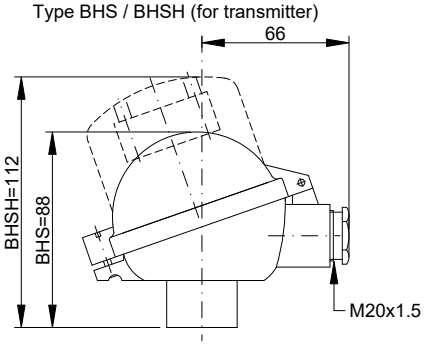

Measuring insert

Mineral insulated with bushing

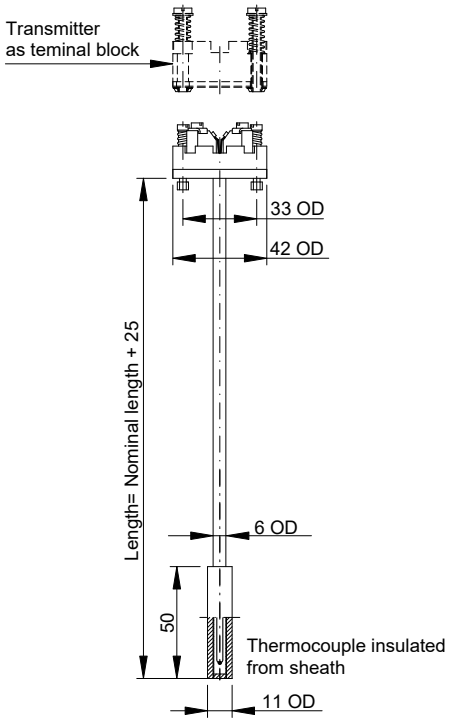

Features for protective tube

Application	W.no. 1.4571 max. 800°C
Liquids	Recommended
Acid	Recommended
Sulphur atmospheres	Suitable
Clorine atmospheres	Suitable
Oxidizing atmospheres	Recommended
Reducing atmospheres	Not suitable
Carburizing atmospheres	Not suitable

Process connection

Fig. 1

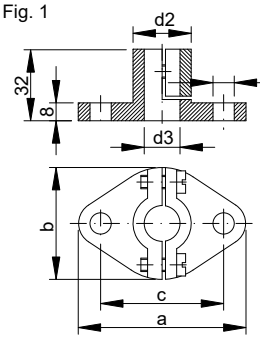

Adjustable flange DIN 43734
Steel W.no. 1.0401

Protective tube Diameter	Dimensions				
	a	b	c	d2	d3
15	75	50	55	26	16

Fig. 2

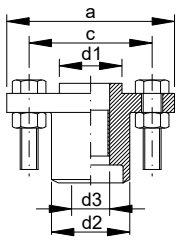

Counter flange DIN 43734 f/steel tube
Steel W.no. 1.0401
Max. 1 bar, teflon ferrule olive sealing

Protective tube Diameter	Dimensions				
	a	c	d1	d2	d3
15	75	55	28	35	17

Fig. 3

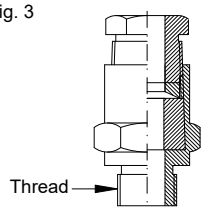

Compression fitting for steel tube
Steel W.no. 1.0718
Max. 1 bar, teflon ferrule olive sealing

Protective tube (dia.)	Thread
15	3/4" BSP

Response time

Protective tube Diameter	Response time in seconds (guidelines)			
	In water @ 0.4m/sec.		In air @ 3m/sec.	
	$t_{0.5}$	$t_{0.9}$	$t_{0.5}$	$t_{0.9}$
15	26	80	115	350

Note:

The 0.5/0.9 time is the time that it takes the sensor to reach 50%/90% of the final value of a temperature change of a medium.

If media and velocity are different from the ones stated, the time can change significantly.

Connection diagram

Thermocouple		Transmitter FPTU/FPTT *)
Single TC	Duplex TC	

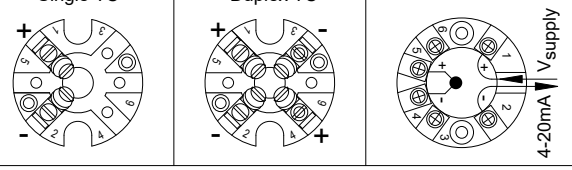

*) for model FPTH see separate datasheet

AMETEK DENMARK A/S Gydevang 32-34, 3450 Allerød, DK, Tlf: 48168000, E-mail: jofra@ametek.com, Web: www.jofra.com

SS-FP-1301-UK Version 202401

Frode Pedersen temperature sensors

Thermocouple assembly B

Screw-in type with interchangeable insert

Data sheet 1304

Application

- Measurement of temperature in pipes and containers with gaseous and liquids media, such as air, vapour, gasses, water and oil
- The operating range is up to 800°C, max. 50 bar and flow velocity up to 25m/sec (air)
- Fields of application
  - Petro- and chemical process engineering
  - Power plants
  - Boilers

Technical features

- Thermocouple type J, K and N acc. to to IEC 584-1 (EN60584-1)
- Permissible mechanical and thermal stress acc. to DIN 43772
- Connected to the process with a screwed attachment welded on the protective tube
- The measuring insert can be exchanged or calibrated without closing down the process
- Measuring insert is a mineral insulated type, vibrationproof
- Protective tube stainless and acidproof steel
- Optionally, can be supplied with head mounted transmitter

Ordering

The requested sensor is selected from the table below
The colour code means:

Standard: Built of standard modules (short delivery time)

Variant: Modified standard modules

We are specialist in temperature measurement.
Please contact us and we shall do our utmost to solve your specific measuring task

Assembly **Measuring insert**

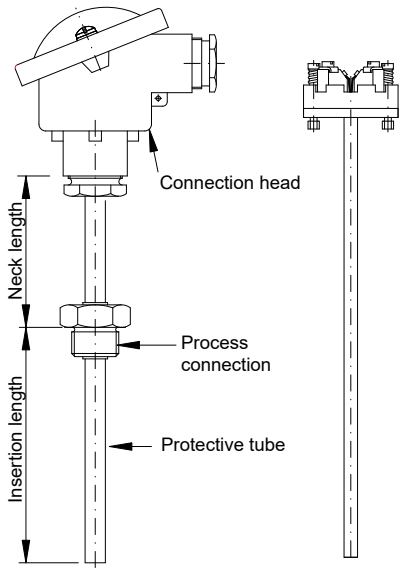

Ordering information

Sensor **Transmitter**

Specification number 1304- | **4mA: °C 20mA: °C** 4)

Protective tube

SS and acidproof steel,W.no.1.4571(AISI316Ti)
Max. 800°C

9mm OD. 1mm wall	0
11mm OD. 2mm wall	1
15mm OD. 1.5mm wall (3/4" BSP recom.)	2

Neck length (mm)

25 (min.)	0
50	1
100	2
150	3
Special:	9

Insertion length (mm)

PS. for length > 400mm 15 OD mm protective tube and 3/4"BSP are recommended

100	0100
150	0150
200	0200
250	0250
400	0400
Interim lengths (Min.50, max. 3000)	xxxx

Process connection (see page 2)

1/2" BSP	0
3/4" BSP	1
1" BSP	2
1/2" NPT	3

Connection head

B:	Degree of protection IP 54	0
BHS:	Degree of protection IP 65	1
BHSH:	Degree of protection IP 65, high cap for transmitter	2
B:	Degree of protection IP 54, BHX high cap for tranmitter	3

Electrical connection

0	Terminalblock with screws
1	Transmitter FPTU galvanic isolated. As terminal block
3	Transmitter FPTU galvanic isolated. EEXiaIICT4/6. As terminal block
a	Transmitter FPTT galvanic isolated. As terminal block
c	Transmitter FPTT galvanic isolated. EEXiaIICT4/6. As terminal block
d	Transmitter FPTH, galvanic isolated. Hart/SIL. As terminal block
e	Transmitter FPTH, galvanic isolated. Hart/SIL.EEXiaIICT4/6. As terminal
9	None. Without terminal block, flying ends for transmitter

Note 4: Please specify measuring range in °C

Tolerance acc to EC 584-1 (EN60584-1)

0	Class 2, for J, K and N, i.e. ±2.5°C or 0.0075 x t_{actual} (°C) 3)
1	Class 1, for J, K and N, i.e. ±1.5°C or 0.0040 x t_{actual} (°C) 3)

Note 3: The highest value apply

Number of thermocouples

0	1
1	2

Measuring insert — Max. temperature 1)

	Model	Thermocouple	Type	Diam./type	Continuously
0	TK80	Fe-CuNi	J	6 MI 2)	800°C
1	TK115	NiCr-Ni	K	6 MI 2)	1000°C
2	TK125	Nicrosil-Nisil	N	6 MI 2)	1100°C

Note 1: The values apply for the thermocouple.
Note 2: MI= Mineral insulated cable

Accessesories

Measuring insert: See data sheet 9108
Transmitter: See data sheet 9168

AMETEK®
SENSORS, TEST & CALIBRATION

TECHNICAL DATA

All dimensions in mm

Dimensions

Assembly
Connection head

Type B / B+BHX Cap (for transmitter)

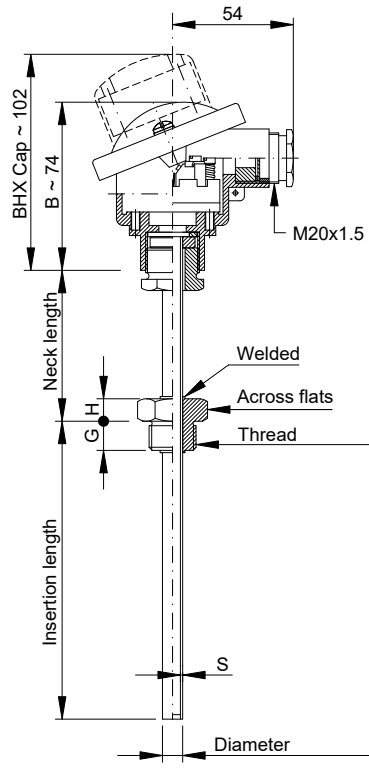

Type BHS / BHSH (for transmitter)

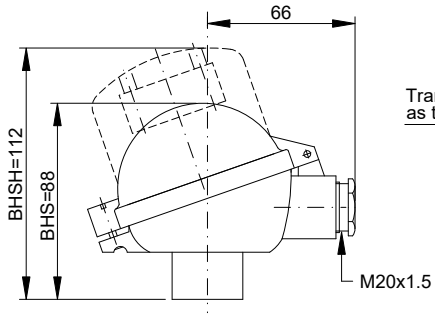

Measuring insert

Type TK, mineral insulated

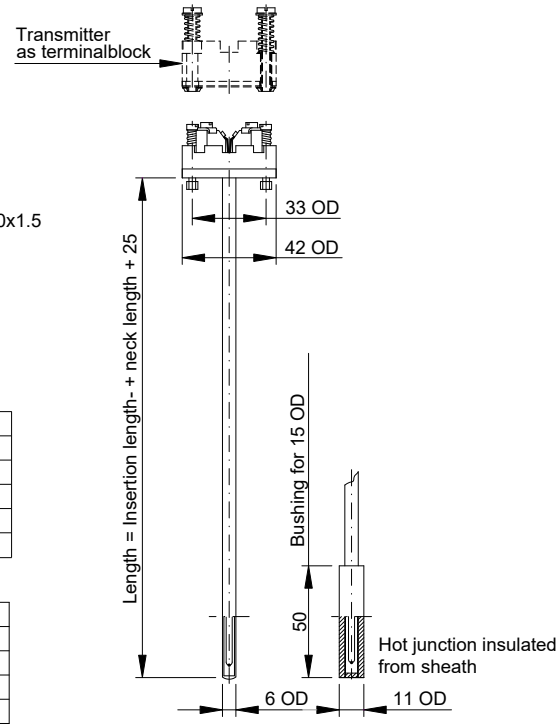

Process connection			
Thread	Across flats	G	H
1/2" BSP	27	13	10
1/2" NPT	27	15	13
3/4" BSP	32	14.5	12
1" BSP	41	17	14

Protective tube W.no. 1.4571 (AISI316	
Diameter OD	Wall thickness S
9	1
11	2
15	1.5

Installation of screw- in sensor

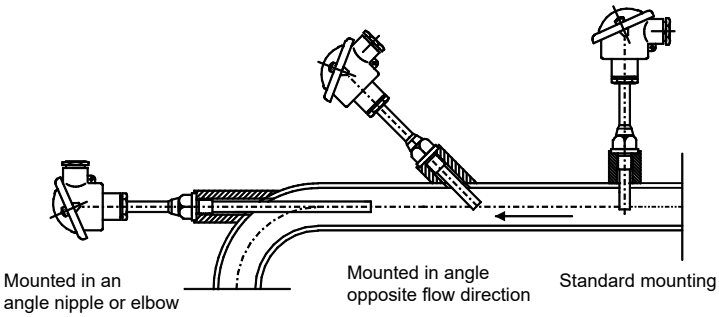

Mounted in an angle nipple or elbow

Mounted in angle opposite flow direction

Standard mounting

Insertion length

In order to minimize heat dissipation/conduction from sensor tip to the surroundings it is recommended to select the sensor length acc. to guidelines in below table.
The length of the sensor also has to concidered with regards to vibrations, shocks and resonance frequency. Here it is important to ensure that the sensor does not get too long if mounted in a very turbulent liquid medium.
The insertion depth should further be added to the physical length of the sensing element (TSL), which typical is 4-5 mm for thermocpouples.

Medium	Dynamic	Static
Liquid	5 - 10 x dia.	10 - 20 x dia.
Air	10 - 20 x dia.	20 - 40 x dia.

Load for protective tube acc. to DIN 43772, material W.no. 1.4571

Partly as form 2/2G+8/9 acc. DIN 43772 *) note						
Protective tube - diameter OD/ID		9/7	11/7	15/12	11/7	15/12
Process connection		1/2" BSP/NPT	1/2" or 3/4" BSP/NPT		1" BSP	
Torque on installation,max.		50Nm	50Nm	50Nm	100Nm	100Nm
Maximum flow velocity (m/sec)	Air	25	25	25	40	40
	Superheated steam	25	25	25	40	40
	Water	3	3	3	5	5

*) note
Dynamic load in relation to pressure, media velocity, length and material see DIN 43772

Response time

Protective tube Diameter	Response time in seconds (guidelines)			
	In water @ 0.4m/sec.		In air @ 3m/sec.	
	$t_{0.5}$	$t_{0.9}$	$t_{0.5}$	$t_{0.9}$
9	17	55	98	290
11	22	70	102	310
15	26	77	120	350

*)Note:
The 0.5/0.9 time is the time that it takes the sensor to reach 50%/90% of the final value of a temperature change of a medium.
If media and velocity are different from the ones stated, the time can change significantly.

Connection diagram

Thermocouple		Transmitter FPTU/FPTT *)
Single TC	Duplex TC	

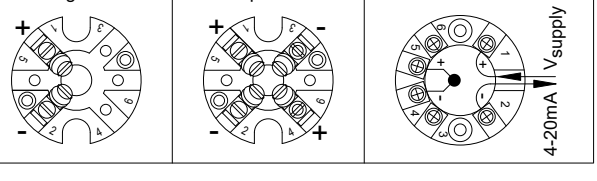

*) for model FPTH see separate datasheet

AMETEK DENMARK A/S Gydevang 32-34, 3450 Allerød, DK, Tlf: 48168000, E-mail: jofra@ametek.com, Web: www.jofra.com

SS-FP-1304-UK. Version 202401

Frode Pedersen temperature sensors

Thermocouple assembly BH

With interchangeable insert and fast response time

Data sheet 1305

Application

- Measurement of temperature in pipes and containers with gaseous and liquids media, such as air, vapour, gasses, water and oil
- The operating range is up to 800°C, max. 50 bar and flow velocity up to 25m/sec (air)
- Fields of application
  - Petro- and chemical process engineering
  - Power plants
  - Boilers

Technical features

- Thermocouple type J, K and N acc. to EC 584-1 (EN60584-1)
- Permissible mechanical and thermal stress acc. to DIN 43772
- Connected to the process with a screwed attachment welded on the protective tube
- The measuring insert can be exchanged or calibrated without closing down the process
- Fast response time with 6mm OD tip matched to the 3mm OD insert
- Protective tube stainless and acidproof steel
- Optionally, can be supplied with head mounted transmitter

Ordering

The requested sensor is selected from the table below
The colour code means:

Standard: Built of standard modules (short delivery time)

Variant: Modified standard modules

We are specialist in temperature measurement.
Please contact us and we shall do our utmost to solve your specific measuring task

Assembly **Measuring insert**

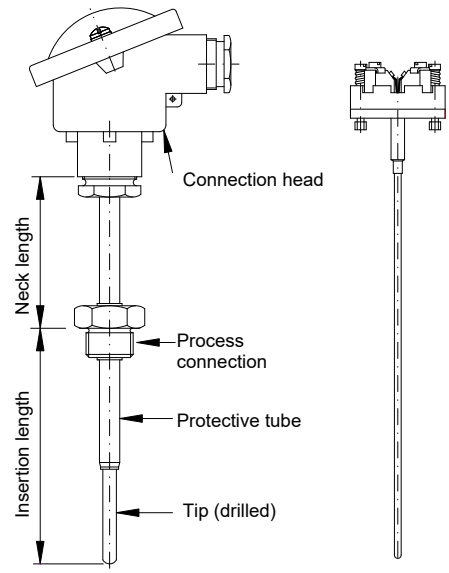

Ordering information — Sensor — Transmitter

Specification number 1305- | **4mA: °C 20mA: °C** 4)

Protective tube

SS, acidproof steel, W.no.1.4571 (AISI316Ti)
Max. 800°C

9mm OD. 1mm wall. Tip: OD/ID=6/3.2mm	0
11mm OD. 2mm wall. Tip: OD/ID=6/3.2mm	1

Neck length (mm)

25 (min.)	0
50	1
100	2
150	3
Special:	9

Insertion length (mm)

100	0100
150	0150
200	0200
250	0250
400	0400
Interim lengths (Min.100, max. 3000)	xxxx

Process connection (see page 2)

1/2" BSP	0
3/4" BSP (only for 9mm OD protective tube)	1
1" BSP	2

Connection head

B:	Degree of protection IP 54	0
BHS:	Degree of protection IP 65	1
BHSH:	Degree of protection IP 65, high cap for transmitter	2
B:	Degree of protection IP 54. BHX high cap for tranmitter	3

Electrical connection

0	Terminalblock with screws
1	Transmitter FPTU galvanic isolated. As terminal block
3	Transmitter FPTU galvanic isolated. EEXiaIICT4/6. As terminal block
a	Transmitter FPTT galvanic isolated. As terminal block
c	Transmitter FPTT galvanic isolated. EEXiaIICT4/6. As terminal block
d	Transmitter FPTH, galvanic isolated. Hart/SIL. As terminal block
e	Transmitter FPTH, galvanic isolated. Hart/SIL.EEXiaIICT4/6. As terminal
9	None. Without terminal block, flying ends for transmitter

Note 4: Please specify measuring range in °C

Tolerance acc to IEC 584-1 (EN60584-1)

0	Class 2, for J, K and N, i.e. ±2.5°C or 0.0075 x t_{actual} (°C) 3)
1	Class 1, for J, K and N, i.e. ±1.5°C or 0.0040 x t_{actual} (°C) 3)

Note 3: The highest value apply

Number of thermocouples

0	1
1	2

Measuring insert — Max. temperature 1)

Model	Thermocouple	Type	Diam./type	Continuously
TK80	Fe-CuNi	J	3 MI 2)	800°C
TK115	NiCr-Ni	K	3 MI 2)	1000°C
TK125	Nicrosil-Nisil	N	3 MI 2)	1100°C

Note 1: The values apply for the thermocouple.
Note 2: MI= Mineral insulated cable

Accessesories

Measuring insert:	See data sheet 9108
Transmitter:	See data sheet 9168

AMETEK® SENSORS, TEST & CALIBRATION

TEKNISKE DATA

Alle mål i mm

Dimensioner

Armatur
Tilslutningshoved

Type B / B+BHX LÅG (for transmitter)

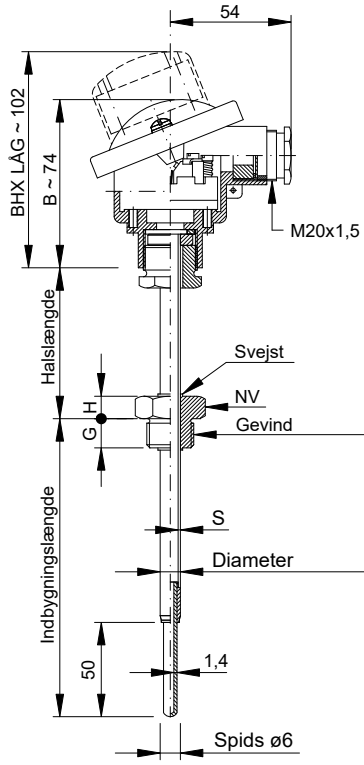

Type BHS / BHSH (for transmitter)

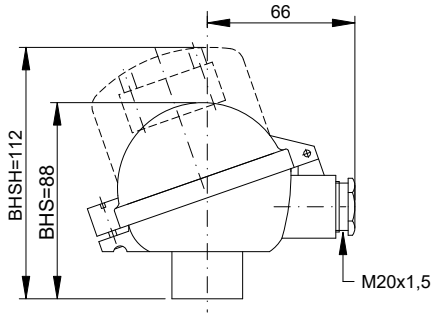

Procestilslutning			
Gevind	NV	G	H
1/2" RG	27	13	10
3/4" RG	32	14,5	12
1" RG	41	17	14

Beskyttelsesrør og spids W.nr. 1.4571	
Diameter	Godstykkelse S
ø9	1
ø11	2

Måleindsats

Kappeudførelse-rystesikker

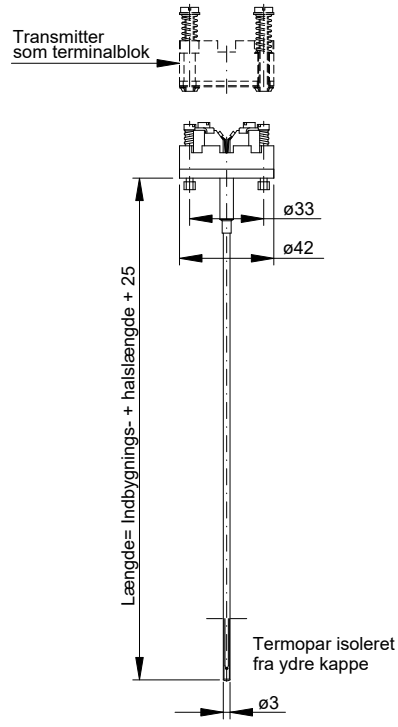

Montage af indskruningsføler

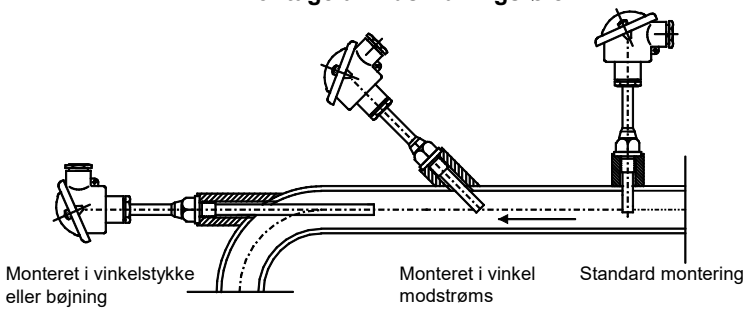

Indbygningslængde:

For at minimere varmeafledning anbefales en indstiksdybde iht. nedenstående skema. Længden af føleren skal også vurderes mht. vibrationer, rystelser og ressonansfrekvens. Her er det specielt vigtigt at sikre, at føleren ikke bliver for lang ved montage i et stærkt turbulent medie. Indstikslængden skal endvidere tillægges følerelementets fysisike udstrækning (TFL), typisk 4-5mm for termoelement.

Medium	Dynamisk	Statisk
Væske	5 - 10 x dia.	10 - 20 x dia.
Luft	10 - 20 x dia.	20 - 40 x dia.

Belastning for beskyttelsesrør iht. DIN 43772, materiale W.nr. 1.4571

Delvis som form 3/3G +8/9 iht DIN 43772 *) note				
Beskyttelsesrør		ø9x1	ø11x2	ø11x2
Procestilslutning		1/2" RG	1/2" RG eller 3/4" RG	1" RG
Tilspændingsmoment (max.)		50Nm	50Nm	100Nm
Tilladelig strømningshastighed (m/s)	Luft	25	25	40
	Heddamp	25	25	40
	Vand	3	3	5

*) note
Dynamisk belastning mht tryk/ mediehastighed og længde - se DIN 43772

Reaktionstid

Beskyttelsesrør ø9/ø11 med ø6mm spids	Vejledende reaktionstider i sekunder			
	I vand med 0,4m/sek		I luft med 3m/sek	
	$t_{0,5}$	$t_{0,9}$	$t_{0,5}$	$t_{0,9}$
	5	15	75	225

Bemærkning:
Ved andre medier og strømningshastigheder ændres tiderne væsentligt.
I disse tilfælde skal den aktuelle anvendelse analyseres nærmere, før vi kan oplyse reaktionstiderne

Tilslutningsdiagram

Termopar		Transmitter FPTU/FPTT *)
Enkelt termopar	Dobbelt termopar	

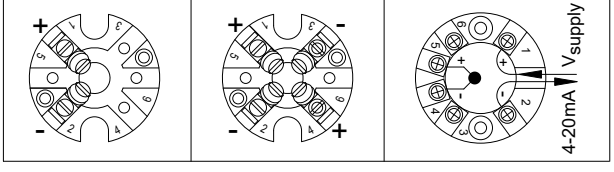

*) for model FPTH se separat datablad

AMETEK DENMARK A/S Gydevang 32-34, 3450 Allerød, DK, Tlf: 48168000, E-mail: jofra@ametek.com, Web: www.jofra.com

SS-FP-1305-DK. Version 202401

Frode Pedersen temperature sensors

Thermocouple assembly D

for welding with interchangeable insert

Data sheet 1306

Application

- Temperature measurement in pipe systems and tanks with gasses and fluid medias such as air, steam and water at high pressure and flow velocity
- Operating range is up to 600°C, max. 450 bar (water) and 60 m/sec. (steam)
- Fields of application
  - Boilers
  - Power plants
  - Chemical process engineering

Technical features

- Thermocouple type J, K or N acc. to IEC 584-1 (EN60584-1)
- Permissible mechanical and thermal stress acc. to DIN 43772
- Installed to the process by welding
- The measuring insert can be exchanged or calibrated without closing down the process
- Measuring insert is a mineral insulated type, vibrationproof
- Thermowell drilled from bar stock
- Optionally, can be supplied with head mounted transmitter

Ordering

The requested sensor is selected from the table below
The colour code means:

Standard: Built of standard modules (short delivery time)

Variant: Modified standard modules

We are specialist in temperature measurement.
Please contact us and we shall do our utmost to solve your specific measuring task

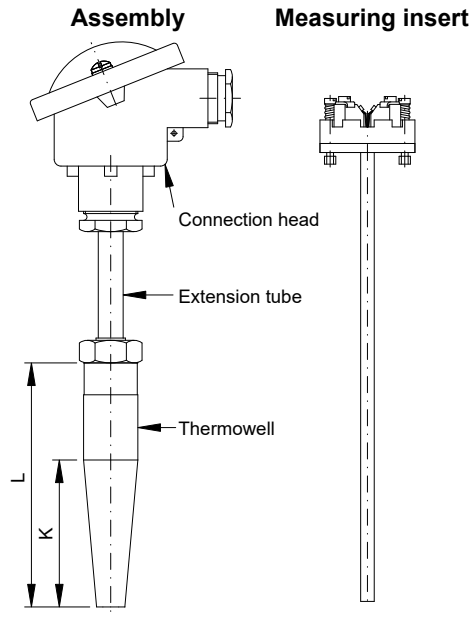

Ordering information

Sensor | **Transmitter**

Specification number 1306- | **4mA: °C 20mA: °C** 4)

Thermowell

Type: Form 4

D1	Length L=140	Conus K= 65	0
D2	Length L=200	Conus K=125	1
D4	Length L=200	Conus K= 65	2
D5	Length L=260	Conus K=125	3
None.	Insert for D1 (140)		a
None.	Insert for D2 (200)		b
None..	Insert for D4 (200)		c
None.	Insert for D5 (260)		d
None.	Insert for special thermowell L (reguired)		9

Material:

None	0
W.no. 1.5415 16Mo3	1
W.no. 1.7335 13CrMo4-5	2
W.no. 1.4404 AiSi 316L	4

Thermowell/instrument connection:

M18x1,5. (Standard)	6
1/2" RG	7
1/2" NPT	8

Extension tube (mm)

52	0	5	2
102	1	0	2
152	1	5	2
202	2	0	2
Special (Min. 52, max. 502)	x	x	x

Connection head

B: Degree of protection IP 54	0
BHS: Degree of protection IP 65	1
BHSH: Degree of protection IP 65, high cap for transmitter	2
B: Degree of protection IP 54, BHX high cap for tranmitter	3

Electrical connection

0	Terminalblock with screws
1	Transmitter FPTU galvanic isolated. As terminal block
3	Transmitter FPTU galvanic isolated. EEXiallCT4/6. As terminal block
a	Transmitter FPTT galvanic isolated. As terminal block
c	Transmitter FPTT galvanic isolated. EEXiallCT4/6. As terminal block
d	Transmitter FPTH, galvanic isolated. Hart/SIL. As terminal block
e	Transmitter FPTH, galvanic isolated. Hart/SIL.EEXiallCT4/6. As terminal
9	None. Without terminal block, flying ends for transmitter

Note 4: Please specify measuring range in °C

Tolerance acc to IEC 584-1 (EN60584-1)

0	Class 2, for J, K and N, i.e. ±2.5°C or 0.0075 x t_{actual} (°C) 3)
1	Class 1, for J, K and N, i.e. ±1.5°C or 0.0040 x t_{actual} (°C) 3)

Note 3: The highest value apply

Number of thermocouples

0	1
1	2

Measuring insert / Max. temperature 1)

Model	Thermocouple	Type	Diam./type	Continuous
TK80	Fe-CuNi	J	6 MI 2)	800°C
TK115	NiCr-Ni	K	6 MI 2)	1000°C
TK125	Nicrosil-Nisil	N	6 MI 2)	1100°C

Note 1: The values apply for the thermocouple.
Note 2: MI= Mineral insulated cable.

Accessesories

Measuring insert	See data sheet 9108-01	Thermowell:	See data sheet 9111
Transmitter:	See data sheet 9168	Extension:	See data sheet 9111

AMETEK®
SENSORS, TEST & CALIBRATION

TECHNICAL DATA

All dimensions in mm

Dimensioner

Assembly
Connection head

Type B / B+BHX Cap (for transmitter)

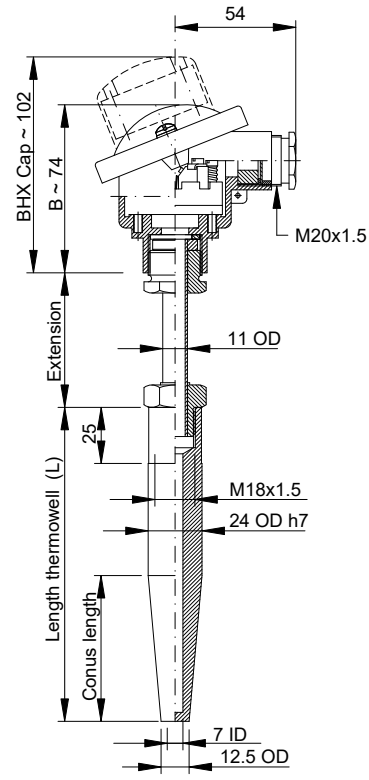

Type BHS / BHSH (for transmitter)

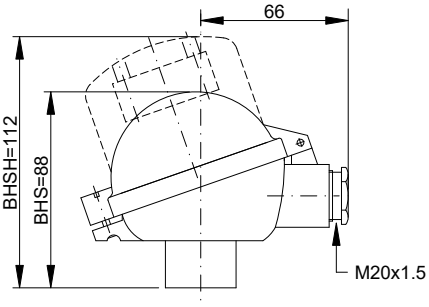

Measuring insert

Type TK, mineral insulated

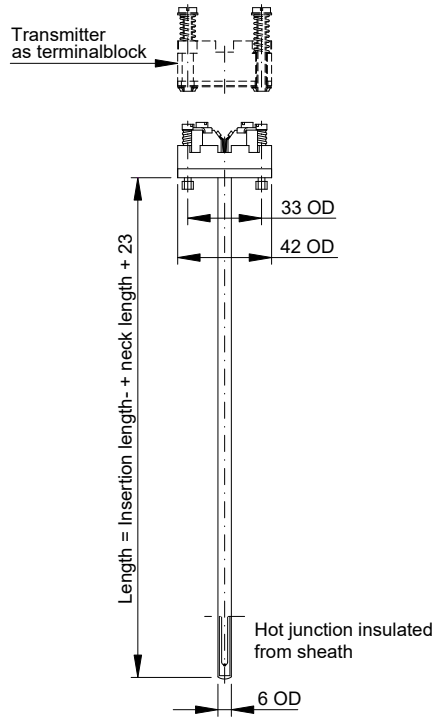

Installation of weld- in thermowell

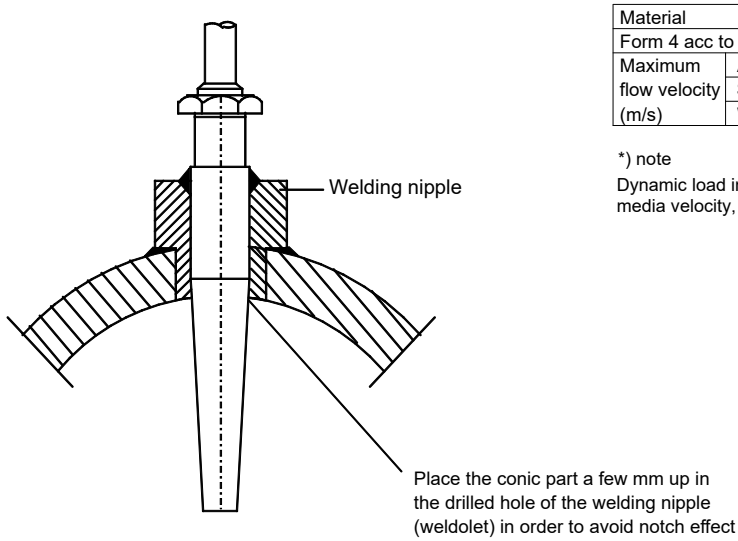

Load/stress for thermowell acc. to DIN 43772

Material		1.5415	1.7335	1.4404	
Form 4 acc to DIN 43772 *) note		D1/2/4/5	D1/2/4/5	D1, D4	D2, D5
Maximum flow velocity (m/s)	Air	60	60	60	60
	Superheated steam	60	60	60	30
	Water	5	5	5	5

*) note

Dynamic load in relation to pressure,
media velocity, length and material see DIN 43772

Response time

Thermowell	Response time in seconds (guidelines)					
	In water @ 0.4m/sec.		In air @ 1m/sec		In steam @ 40m/sec.	
	$t_{0.5}$	$t_{0.9}$	$t_{0.5}$	$t_{0.9}$	$t_{0.5}$	$t_{0.9}$
D1, D4	8	32	260	1000	20	49
D2 D5	6	27	225	800	10	29

Note:

The 0.5/0.9 time is the time that it takes the sensor to reach 50%/90% of the final value of a temperature change of a medium.
If media and velocity are different from the ones stated, the time can change significantly.

Connection diagram

Thermocouple		Transmitter FPTU/FPTT *)
Single TC	Duplex TC	

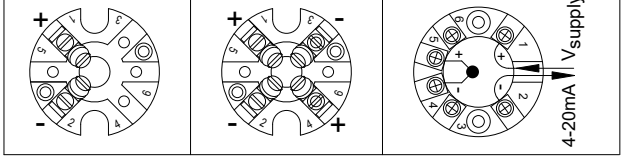

*) for model FPTH se separat datablad

SS-FP-1306-UK Version 202401

AMETEK DENMARK A/S Gydevang 32-34, 3450 Allerød, DK, Tlf: 48168000, E-mail: jofra@ametek.com,
Web: www.jofra.com

Thermocouple assembly DS

for welding with interchangeable insert

Data sheet 1307

FRODE PEDERSEN

Application

- Temperature measurement in pipe systems and tanks with gasses and fluid medias such as air, steam and water at high pressure and flow velocity
- Operating range is up to 600°C, max. 450 bar (water) and 60 m/sec. (steam)
- Fields of application
  - Boilers
  - Power plants
  - Chemical process engineering

Technical features

- Thermocouple type J, K or N acc.to IEC 584-1 (EN60584-1
- Permissible mechanical and thermal stress acc. to DIN 43772
- Installed to the process by welding
- The measuring insert can be exchanged or calibrated without closing down the process
- Measuring insert is a mineral insulated type, vibrationproof
- Thermowell drilled from bar stock. Fast response time
- Optionally, can be supplied with head mounted transmitter

Assembly **Measuring insert**

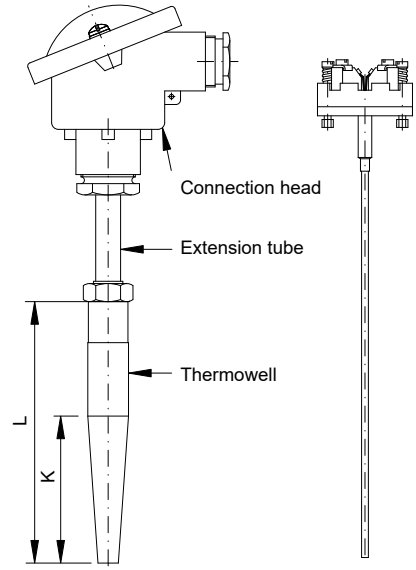

Ordering

The requested sensor is selected from the table below
The colour code means:

Standard: Built of standard modules (short delivery time)

Variant: Modified standard modules

We are specialist in temperature measurement.
Please contact us and we shall do our utmost to solve your specific measuring task

Ordering information **Sensor** **Transmitter**

Specification number	**1307-**											**4mA:**	**°C**	**20mA:**	**°C**	4)

Thermowell

Type: Form F4

D5S	Length L=115	Conus K=40	0
D4S	Length L=140	Conus K=65	1
D4SS	Length L=200	Conus K=65	2
None.	Insert for D5S (115)		a
None.	Insert for D4S (140)		b
None.	Insert for D4SS (200)		c

Material:

None	0
W.no. 1.7335 13CrMo4-5	1
W.no. 1.4404 AiSi 316L	3
W.no. 1.5415 16Mo3	4

Extension tube (mm)

52	0 5 2
102	1 0 2
152	1 5 2
202	2 0 2
Special (Min. 52, max. 502)	x x x

Connection head

B:	Degree of protection IP 65 — 0
BHS:	Degree of protection IP 65 — 1
BHSH:	Degree of protection IP 65, high cap for transmitter — 2
B:	Degree of protection IP 54, BHX high cap for tranmitter — 3

Electrical connection

0	Terminalblock with screws
1	Transmitter FPTU galvanic isolated. As terminal block
3	Transmitter FPTU galvanic isolated. EEXiaIICT4/6. As terminal block
a	Transmitter FPTT galvanic isolated. As terminal block
c	Transmitter FPTT galvanic isolated. EEXiaIICT4/6. As terminal block
d	Transmitter FPTH, galvanic isolated. Hart/SIL. As terminal block
e	Transmitter FPTH, galvanic isolated. Hart/SIL.EEXiaIICT4/6. As terminal
9	None. Without terminal block, flying ends for transmitter

Note 4: Please specify measuring range in °C

Tolerance acc to IEC 584-2 (EN60584-1)

0	Class 2, for J, K and N, i.e. ±2.5°C or 0.0075 x t_{actual} (°C) 3)
1	Class 1, for J, K and N, i.e. ±1.5°C or 0.0040 x t_{actual} (°C) 3)

Note 3: The highest value apply

Number of thermocouples

0	1

Measuring insert — Max. temperature 1)

Model	Thermocouple	Type	Diam./type		Continuously
TK80	Fe-CuNi	J	3	MI 2)	800°C
TK115	NiCr-Ni	K	3	MI 2)	1000°C
TK125	Nicrosil-Nisil	N	3	MI 2)	1100°C

Note 1: The values apply for the thermocouple.
Note 2: MI= Mineral insulated cable.

Accessesories

Measuring insert	See data sheet 9108-01	Thermowell:	See data sheet 9111
Transmitter:	See data sheet 9168	Extension:	See data sheet 9111

AMETEK®
SENSORS, TEST & CALIBRATION

TECHNICAL DATA

All dimensions in mm

Dimensions

Assembly
Connection head

Type B / B+BHX CAP (for transmitter)

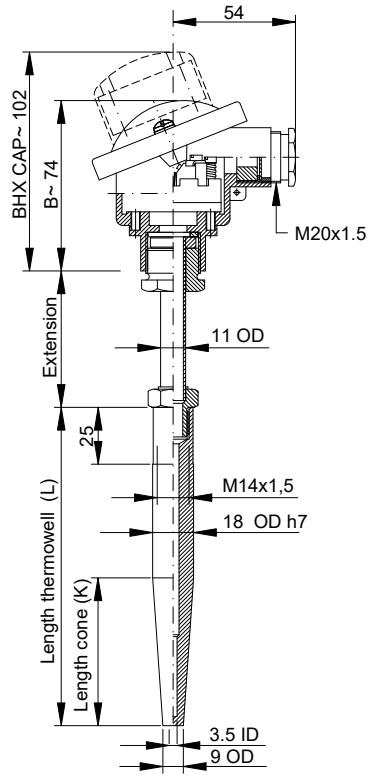

Type BHS / BHSH (for transmitter)

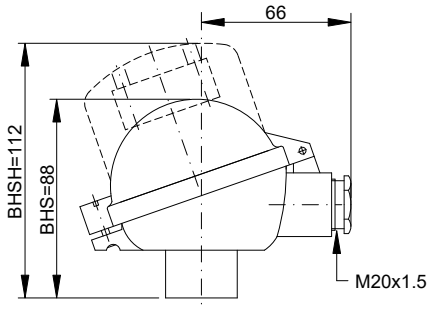

Measuring insert

Type TK, mineral insulated

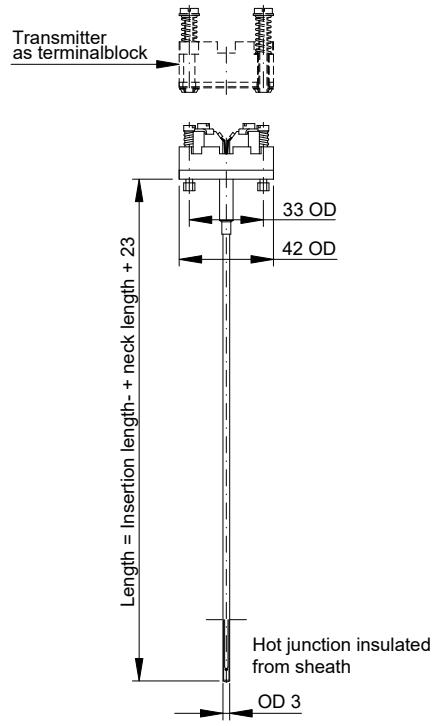

Installation of weld- in thermowell

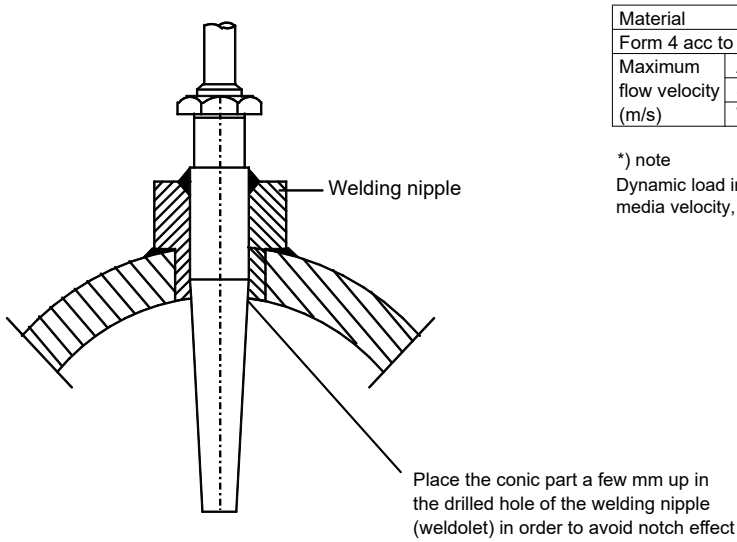

Load/stress for thermowell acc. to DIN 43772

Material		1.5415	1.7335	1.4404	
Form 4 acc to DIN 43772 *) note		DS	DS	DS	DS
Maximum flow velocity (m/s)	Air	60	60	60	60
	Superheated steam	60	60	60	30
	Water	5	5	5	5

*) note
Dynamic load in relation to pressure,
media velocity, length and material see DIN 43772

Response time

Thermowell	Response time in seconds (guidelines)					
	In water @ 0.4m/sec.		In air @ 1m/sec.		In steam @ 40m/sec.	
	$t_{0.5}$	$t_{0.9}$	$t_{0.5}$	$t_{0.9}$	$t_{0.5}$	$t_{0.9}$
DS/DSS	2	6	200	950	4	8

Note:

The 0.5/0.9 time is the time that it takes the sensor to reach 50%/90% of the final value of a temperature change of a medium.
If media and velocity are different from the ones stated, the time can change significantly.

Connection diagram

Thermocouple		Transmitter FPTU/FPTT *)
Single TC	Duplex TC	

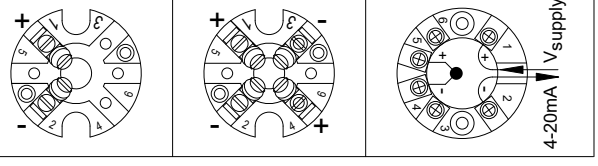

*) for model FPTH se separat datablad

AMETEK DENMARK A/S Gydevang 32-34, 3450 Allerød, DK, Tlf: 48168000, E-mail: jofra@ametek.com,
Web: www.jofra.com

SS-FP-1307-UK Version 202401

Frode Pedersen temperature sensors

Thermocouple assembly AF

mesuring insert with connection head

Data sheet 1308

Application

- Measurement of temperature in ducts and furnaces with air and flue gasses
- The operating range is up to 800°C in the low-pressure range
- Fields of application
  - Chemical process engineering
  - Drying equipment
  - Process industry

Technical features

- Thermocouple type J, K and N acc. to IEC 584-1 (EN60584-1)
- Built as an meauring insert acc. to DIN 43769
- Connected to the process by adjustable flange or compression fittings
- Fast response time
- Measuring insert is a mineral insulated type, vibrationproof
- Modular design and standard length minimize the necessary number of spares
- Optionally, can be supplied with head mounted transmitter

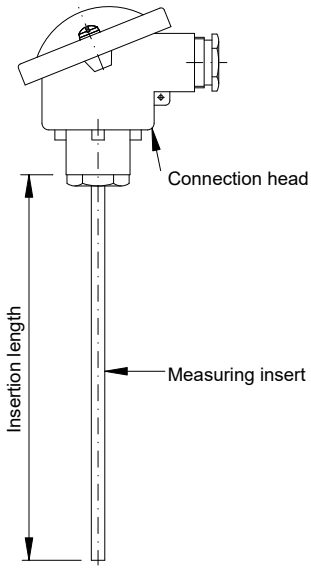

Ordering

The requested sensor is selected from the table below
The colour code means:

Standard: Built of standard modules (short delivery time)

Variant: Modified standard modules

We are specialist in temperature measurement.
Please contact us and we will do our best to solve your specific measuring task

Ordering information

Sensor | **Transmitter**

Specification number 1308- [ ][ ][ ][ ][ ][ ][ ][ ][ ][ ][ ] **4mA: °C 20mA: °C** 4)

Measuring diameter

6mm OD 0

Nominal length (mm)

200	0200
250	0250
300	0300
450	0450
Interim lengths (Min.100, max. 3000)	xxxx

Process connection (see page 2)

None		0
Fig. 1	1/4" BSP compression fittings. Stainless steel	1
Fig. 1	1/2" BSP compression fittings. Stainless steel	3
Fig. 2	Adjustable flange	7

Connection head

B: Degree of protection IP 53	0
B: Degree of protection IP 53. BHX high cap for transmitter	1

Electrical connection

0	Terminalblock with screws
1	Transmitter FPTU galvanic isolated. As terminal block
3	Transmitter FPTU galvanic isolated. EEXiallCT4/6. As terminal block
a	Transmitter FPTT galvanic isolated. As terminal block
c	Transmitter FPTT galvanic isolated. EEXiallCT4/6. As terminal block
d	Transmitter FPTH, galvanic isolated. Hart/SIL. As terminal block
e	Transmitter FPTH, galvanic isolated. Hart/SIL.EEXiallCT4/6. As terminal
9	None. Without terminal block, flying ends for transmitter

Note 4: Please specify measuring range in °C

Tolerance acc. to IEC 584-1 (EN60584-1)

0	Class 2, for J, K and N, i.e. ±2.5°C or 0.0075 x t_{actual} (°C)	3)
1	Class 1, for J, K and N, i.e. ±1.5°C or 0.0040 x t_{actual} (°C)	3)

Note 3: The highest value applies

Number of thermocouples

0	1
1	2

Measuring insert

	Model	Thermocouple	Type	Diam./type		Max. temperature 1) Continuous
0	TK80	Fe-CuNi	J	6	MI 2)	800°C
1	TK115	NiCr-Ni	K	6	MI 2)	1000°C
2	TK125	Nicrosil-Nisil	N	6	MI 2)	1100°C

Note 1: The values apply for the thermocouple.
Note 2: MI= Mineral insulated cable.

Accesesories

Process connection: See data sheet 9113 Measuring insert: See data sheet 9108-01
Transmitter: See data sheet 9168

AMETEK®
SENSORS, TEST & CALIBRATION

TECHNICAL

All dimensions in mm

Dimensions

Complete themocouple assembly AF
Type B / B+BHX Cap (for transmitter)

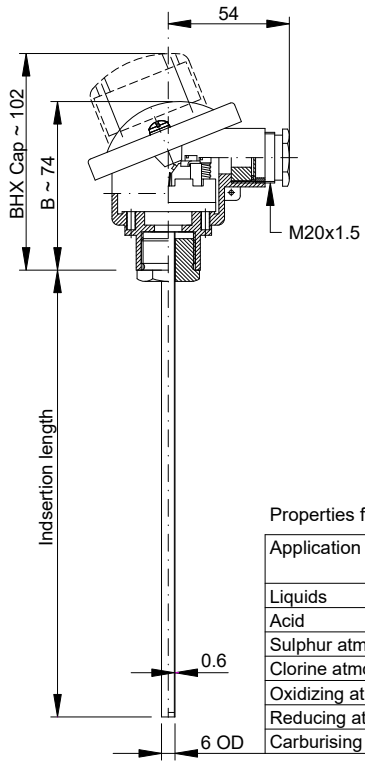

Measuring insert

Mineral insulated

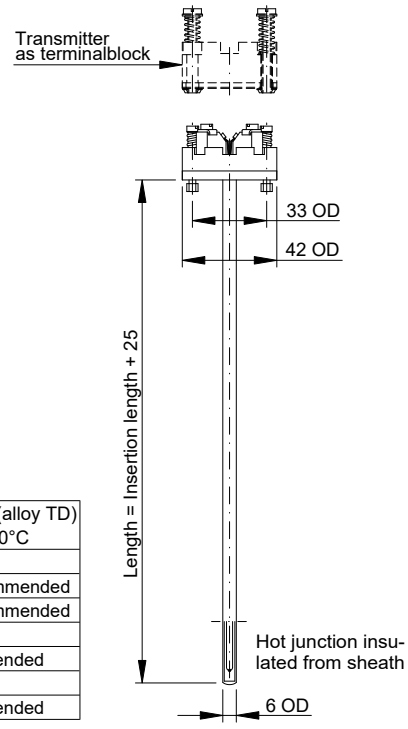

Properties for sheaths of MI (mineral insulated cable)

Application	W.no. 1.4571 max. 800°C	W.no. 1.4841 max. 1150°C	Pyrioil D (alloy TD) max. 1250°C
Liquids	Recommended	Suitable	Suitable
Acid	Recommended	Not recommended	Not recommended
Sulphur atmospheres	Suitable	Not recommended	Not recommended
Clorine atmospheres	Suitable	Suitable	Suitable
Oxidizing atmospheres	Recommended	Recommended 1)	Recommended
Reducing atmospheres	Not recommended	Not recommended	Suitable
Carburising atmospheres	Not recommended	Suitable	Recommended

Note 1: Not recommended for continous operations in the range 425°C to 850°C

Process connection

Fig. 1

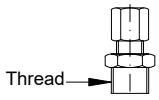

Compression fitting with steel ferrule		
Protective tube	Thread	Material
6 OD	1/4" BSP	SS steel
	3/8" BSP	AiSi316
	1/2" BSP	

Fig. 2

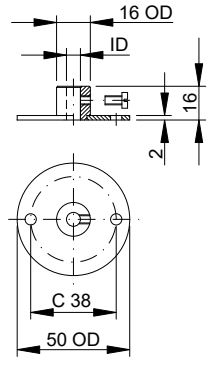

Adjustable flange	
Protective tube	Material
6 OD	Steel AISI 316

Response time

Sheath diameter	Response time in seconds (guidelines)			
	In water @ 0.4m/sec.		In air @ 3m/sec.	
	$t_{0,5}$	$t_{0,9}$	$t_{0,5}$	$t_{0,9}$
6 OD	4	10	60	200

Note:

The 0.5/0.9 time is the time that it takes the sensor to reach 50%/90% of the final value of a temperature change of a medium.

If media and velocity are different from the ones stated, the time can change significantly.

Connection diagram

Thermocouple		Transmitter FPTU/FPTT *)
Single TC	Duplex TC	

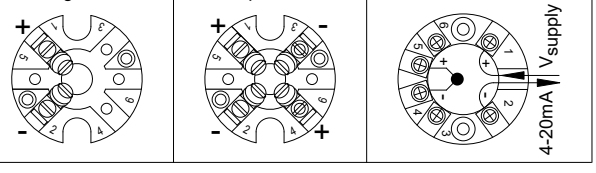

*) for model FPTH see separate datasheet

AMETEK DENMARK A/S Gydevang 32-34, 3450 Allerød, DK, Tlf: 48168000, E-mail: jofra@ametek.com, Web: www.jofra.com

SS-FP-1308-UK Version 202401