Frode Pedersen temperature sensors

Resistance Thermometer A

With interchangeable insert

Data Sheet 1401

Application

- Measurement of temperature in ducts and furnaces with air and flue gasses
- The operating range is up to 600°C in the low-pressure range
- Typically used in
  - Power plants
  - Incinerators
  - Boilers

Technical features

- Pt100 resistance thermometer (RTD) acc. to IEC 751 (EN60751)
- Built acc. to DIN 43764
- 3-wire connection is standard
- Connected to the process by adjustable flange or compression fitting
- The measuring insert can be exchanged or calibrated without closing down the process
- Protective tube in stainless and acid proof steel
- Modular design and standard length minimize the necessary number of spares
- Optionally, can be supplied with head mounted transmitter and display

Ordering

The requested sensor is selected from the table below
The colour code means:

Standard: Built of standard modules (short delivery time)

Variant: Modified standard modules

We are specialist in temperature measurement.
Please contact us and we will do our best to solve your specific measuring task

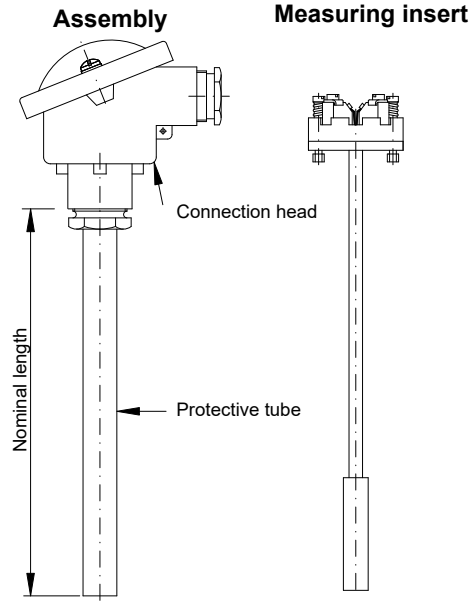

Ordering information

Specification number	1401-	Sensor	Transmitter
			4mA: °C 20mA: °C 2)

Protective tube

Stainless, acid proof steel, W.no. 1.4571 (AISI 316Ti)
Max. 800°C
15mm OD. 1.5mm wall 0

Nominal length (mm)

500	0	5	0	0
710	0	7	1	0
1000	1	0	0	0
1400	1	4	0	0
2000	2	0	0	0
Interim lengths (Min.100, max. 3000)	x	x	x	x

Process connection (see page 2)

None		0
Fig. 1	Adjustable flange	1
Fig. 1+2	Adjustable flange + counter flange	2
Fig. 3	3/4" BSP compression fitting w/teflon ferrule sealing	3

Connection head

B:	Degree of protection IP 54	0
BHS:	Degree of protection IP 65	1
BHSH:	Degree of protection IP 65, high cap for transmitter	2
B:	Degree of protection IP 54, BHX high cap for tranmitter	3
BHSH:	Degree of protection IP 65, high cap and local display 4552 *)	4

*) Only valid with transmitter

Electrical connection

0	Terminalblock with screws
1	Transmitter FPTM (Sensor only as 3-wire)
5	Transmitter FPTU galvanic isolated.
7	Transmitter FPTU galvanic isolated. EEXiallCT4/6
d	Transmitter FPTH, galvanic isolated. Hart/SIL
e	Transmitter FPTH, galvanic isolated. Hart/SIL.EEXiallCT4/6
9	None. Without terminal block, flying ends for transmitter

Note 2: Please specify measuring range in °C

Connection. Wiring configuration

0	3-wire
1	4-wire
2	2-wire

Tolerance acc to IEC 751 (EN60751)

	Class	Value	Apply in the range
0	B	± (0.3°C + 0.005 x t_{actual})°C	-196+600°C
1	A	± (0.15°C + 0.002 x t_{actual})°C	-100+450°C
5	Special	± (0.05°C + 0.0013 x t_{actual})°C	-100+200°C

Resistance value (Ω) acc. to IEC 751 (EN60751)

0	1xPt100
1	2xPt100
2	1xPt1000

Measuring insert: Type and measuring range 1)

0 ..... MK60: -196 +600°C Mineral insulated, vibration proof
Note 1:
Total permissible range.
Actual working range: Value listed in section tolerance class

Accesesories

Process connection: See data sheet 9113
Transmitter: See data sheet 9168 Display: See data sheet 4552

AMETEK®
SENSORS, TEST & CALIBRATION

TECHNICAL DATA

All dimensions in mm

Dimensions

Assembly
Connection head

Type B / B+BHX cap (for transmitter)

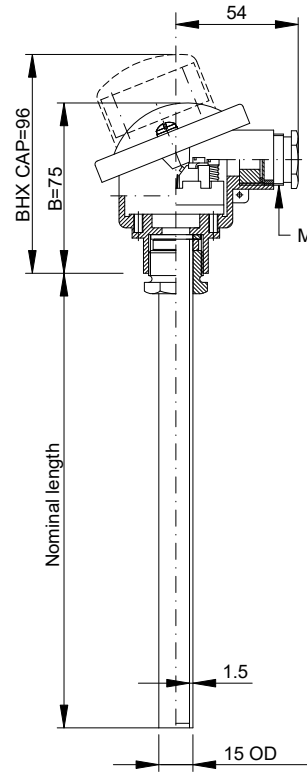

Type BHS / BHSH (for transmitter/display)

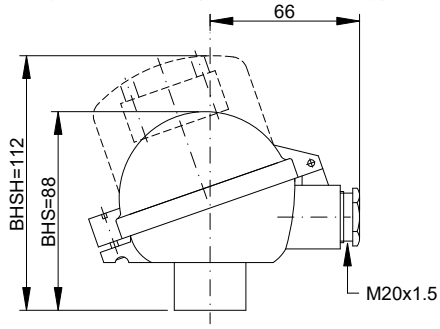

Measuring insert

Mineral insulated with bushing

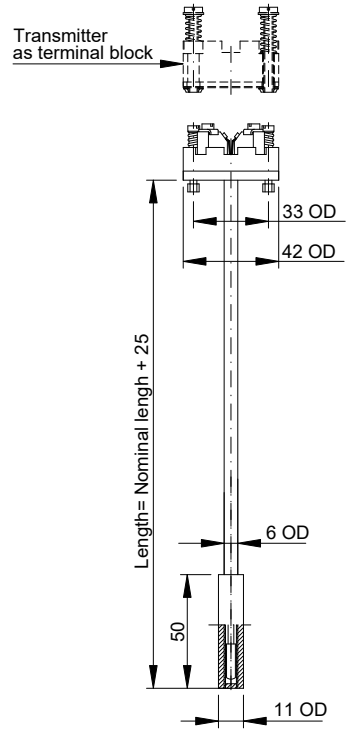

Features for protective tube

Application	W.no. 1.4571 max. 800°C
Liquids	Recommended
Acid	Recommended
Sulphur atmospheres	Suitable
Clorine atmospheres	Suitable
Oxidizing atmospheres	Recommended
Reducing atmospheres	Not suitable
Carburizing atmospheres	Not suitable

Process connection

Fig. 1

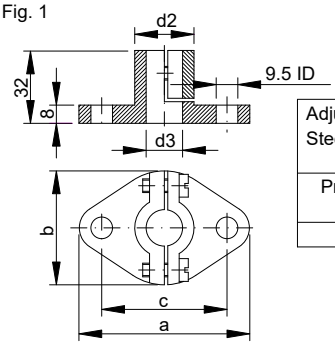

Adjustable flange DIN 43734
Steel W.no. 1.0401

Protective tube	Dimensions				
	a	b	c	d2	d3
15 OD	75	50	55	26	16

Fig. 2

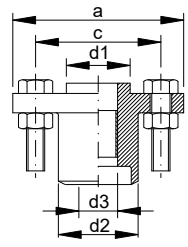

Counter flange DIN 43734 for steel tube
Steel W.no. 1.0401
Max. 1 bar, gas-tight, ceramic sealing

Protective tube	Dimensions				
	a	c	d1	d2	d3
15 OD	75	55	28	35	17

Fig. 3

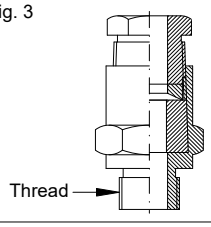

Compression fitting for steel tube
Steel W.no. 1.0718
Max. 1 bar, gas-tight, ceramic sealing

Protective tube	Thread
15 OD	3/4" BSP

Response time

Protective tube	Response time in seconds (guidelines)			
	In water @ 0.4m/sec.		In air @ 3m/sec.	
	$t_{0.5}$	$t_{0.9}$	$t_{0.5}$	$t_{0.9}$
15 OD	30	90	135	410

Note:

The 0.5/0.9 time is the time that it takes the sensor to reach 50%/90% of the final value of a temperature change of a medium.

If media and velocity are different from the ones stated, the time can change significantly.

Connection diagram

*) for model FPTH and display see separate datasheet

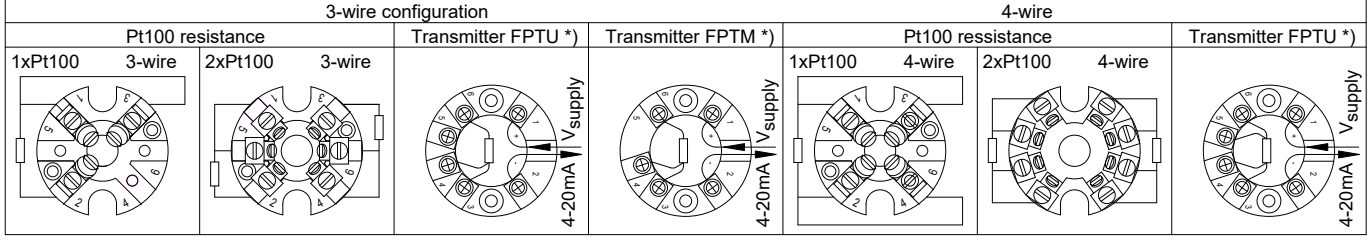

AMETEK DENMARK A/S Gydevang 32-34, 3450 Allerød, DK, Tlf: 48168000, E-mail: jofra@ametek.com,
Web: www.jofra.com

SS-FP-1401-UK. Version 202401

Frode Pedersen temperature sensors

Resistance Thermometer BF

Screw-in type with fixed insert

Data Sheet 1402

Application

- Measurement of temperature in air and liquids media, where a fast response time is required, but also in closed pipes and containers with an optional screw-in pocket.
- The operating range is up to 400°C, max. 50 bar and flow velocity up to 25m/sec (air)
- Fields of application
  - Heat and ventilation (HVAC)
  - Heat distribution (district heating)
  - Machine construction and enviromental engineering

Technical features

- Pt100 resistance thermometer acc. to IEC 751 (EN60751)
- Permissible mechanical and thermal stress acc. to DIN 43772
- 3-wire connection is standard
- Connected to the process with a screwed attachment welded to the protective tube or in a separate screw-in pocket
- Fixed measuring insert with fast response time
- Protective tube stainless and acidproof steel
- Can be supplied with head mounted transmitter as an option

Ordering

The requested sensor is selected from the table below
The colour code means:

Standard: Built of standard modules (short delivery time)

Variant: Modified standard modules

We are specialist in temperature measurement.
Please contact us and we shall do our utmost to solve your specific measuring task

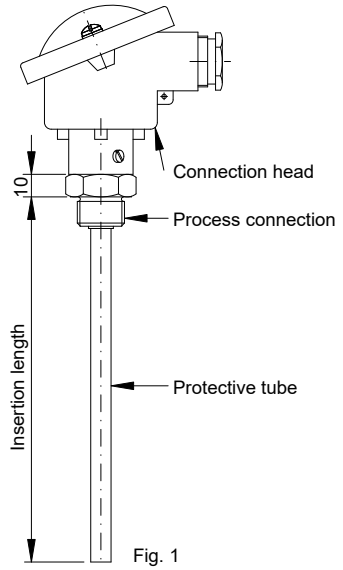

Fig. 1

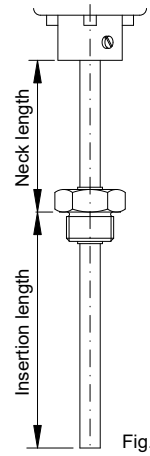

Fig. 2

Ordering information

Sensor | **Transmitter**

Specification number 1402- | **4mA: °C 20mA: °C** 2)

Protective tube

SS, acidproof steel, W.no. 1.4571 (AISI 316Ti)

Max. 400°C

9mm OD. 1mm wall	0
8mm OD. 1mm wall	1

Neck length (mm)

10 (Fig. 1)	0
50 (Fig. 2)	1
100 (Fig. 2)	2
150 (Fig. 2)	3
Special:	9

Insertion length (mm)

50	0	0	5	0
100	0	1	0	0
150	0	1	5	0
200	0	2	0	0
250	0	2	5	0
400	0	4	0	0
Interim lengths (Min. 50, max. 1000)	x	x	x	x

Process connection (see page 2)

1/2" BSP	0
3/4" BSP (only for ø9mm protective tube and neck length 10mm)	1

Connection head

B:	Degree of protection IP 53	0
BHS:	Degree of protection IP 53	1
BHSH:	Degree of protection IP 53, high cap for transmitter	2
B:	Tæthedsgrad IP 53, med højt BHX låg for transmitter	3

Electrical connection

0	Terminalblock with screws
1	Transmitter FPTM (Sensor only as 3-wire)
5	Transmitter FPTU galvanic isolated.
7	Transmitter FPTU galvanic isolated. EEXiallCT4/6
d	Transmitter FPTH, galvanic isolated. Hart/SIL
e	Transmitter FPTH, galvanic isolated. Hart/SIL.EEXiallCT4/6
9	None. Without terminal block, flying ends for transmitter

Note 2: Please specify measuring range in °C

Connection. Wiring configuration

0	3-wire
1	4-wire
2	2-wire

Tolerance acc. IEC 751 (EN60751)

	Class:	Value:	Apply in range:
0	B	± (0.3°C + 0.005 x t_{actual})°C	-50+400°C
1	A	± (0.15°C + 0.002 x t_{actual})°C	-30+300°C
2	B	± (0.3°C + 0.005 x t_{actual})°C	-100+200°C
3	A	± (0.15°C + 0.002 x t_{actual})°C	-100+200°C
5	Special	± (0.05°C + 0.0013 x t_{actual})°C	-100+200°C

Resistance value (Ω) acc. to IEC 751 (EN60751)

0	1xPt100
1	2xPt100 (max 2x3 wires)
2	1xPt1000

Measuring range 1)

0	-50 +400°C
1	-100 +200°C

Note 1) Actual working range: Value listed in section tolerance class

Accessesories

Pocket ISM:	See data sheet 9111
Transmitter:	See data sheet 9168

AMETEK®
SENSORS, TEST & CALIBRATION

TECHNICAL DATA

All dimensions in mm

Dimensions

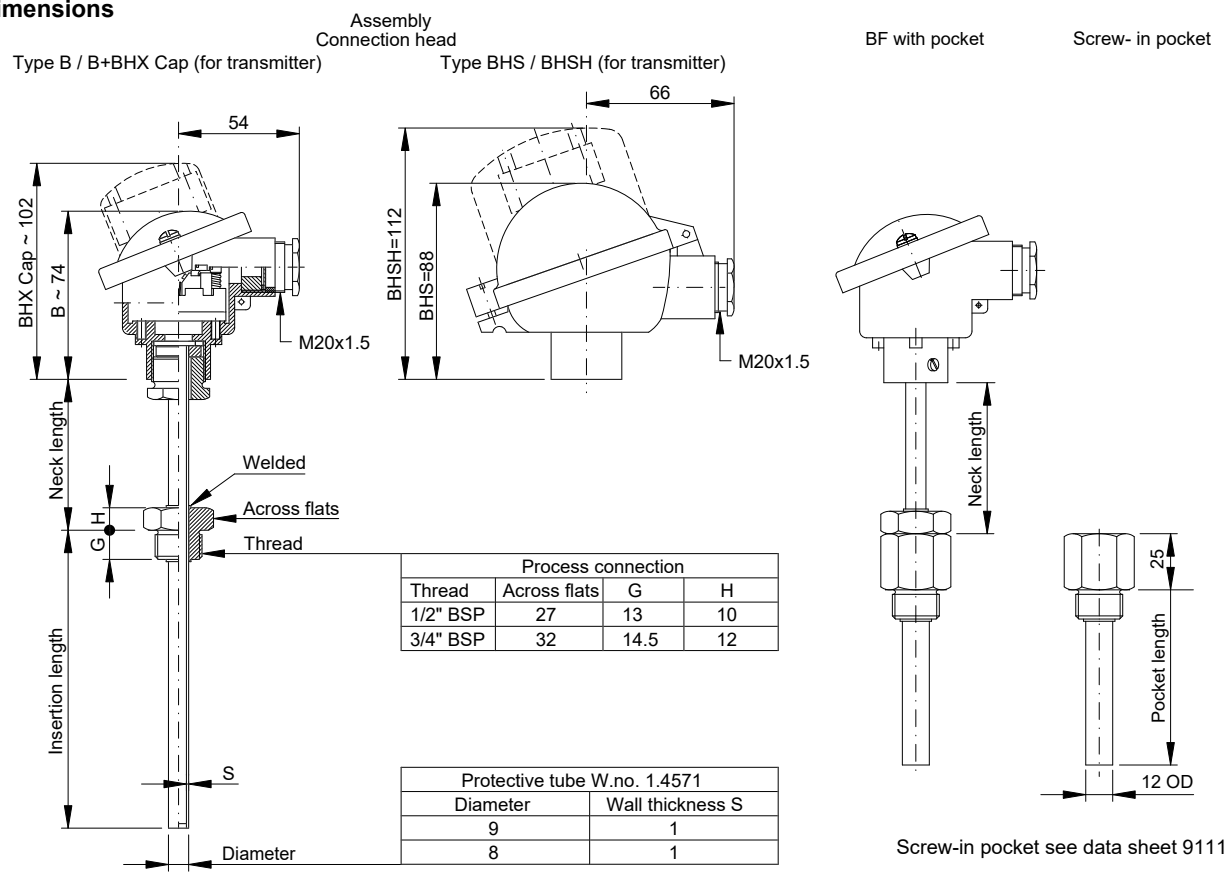

Process connection			
Thread	Across flats	G	H
1/2" BSP	27	13	10
3/4" BSP	32	14.5	12

Protective tube W.no. 1.4571	
Diameter	Wall thickness S
9	1
8	1

Screw-in pocket see data sheet 9111

Installation of screw- in sensor

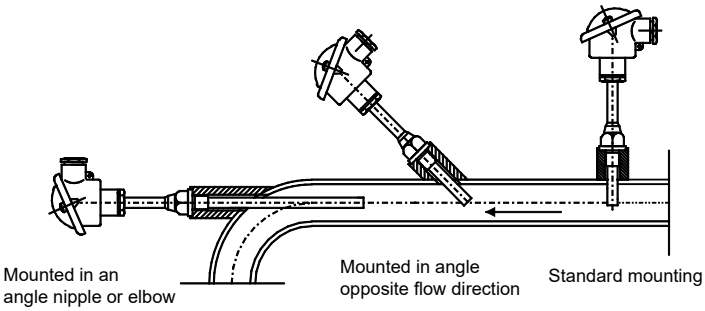

Insertion length

In order to minimize heat dissipation/conduction from sensor tip to the surroundings it is recommended to select the sensor length acc. to guidelines in below table.
The length of the sensor also has to concidered with regards to vibrations, shocks and resonance frequency. Here it is important to ensure that the sensor does not get too long if mounted in a very turbulent liquid medium.
The insertion depth should further be added to the physical length of the sensing element (TSL), which typical is 15-50 mm for RTD.

Medium	Dynamic	Static
Liquid	5 - 10 x dia.	10 - 20 x dia.
Air	10 - 20 x dia.	20 - 40 x dia.

Load for protective tube acc. to DIN 43772, material W.no. 1.4571

Partly as form 2/2G+8/9 acc. DIN 43772 *) note		Fig.1	Fig.2 (pocket)	
Protective tube		OD 9x1	OD 12x1	
Process connection		1/2" BSP	1/2" or 3/4" BSP	
Torque on installation (max.)		50Nm	50Nm	50Nm
Maximum flow velocity (m/sec)	Air	25	25	25
	Superheated steam	25	25	25
	Water	3	3	3

*) note
Dynamic load in relation to pressure, media velocity, length and material see DIN 43772

Response time

Protective tube	Response time in seconds (guidelines)			
	In water @ 0.4m/sec.		In air @ 3m/sec.	
	$t_{0.5}$	$t_{0.9}$	$t_{0.5}$	$t_{0.9}$
9/8 OD	9	26	60	190
With 12 OD pocket	32	108	155	510

Note:

The 0.5/0.9 time is the time that it takes the sensor to reach 50%/90% of the final value of a temperature change of a medium.
If media and velocity are different from the ones stated, the time can change significantly.

Connection diagram *) for model FPTH see separate datasheet

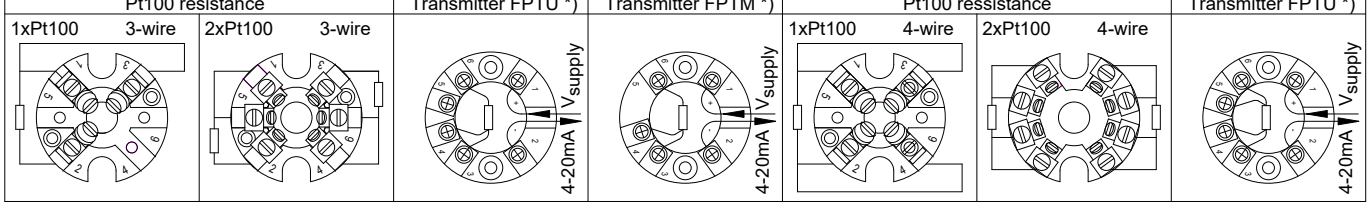

AMETEK DENMARK A/S Gydevang 32-34, 3450 Allerød, DK, Tlf: 48168000, E-mail: jofra@ametek.com, Web: www.jofra.com

SS-FP-1402-UK. Version 202401

Frode Pedersen temperature sensors

Resistance Thermometer B

Screw-in type with interchangeable insert

Data Sheet 1403

Application

- Measurement of temperature in pipes and containers with gaseous and liquids media, such as air, vapour, gasses, water and oil
- The operating range is up to 600°C, max. 50 bar and flow velocity up to 25m/sec (air)
- Fields of application
  - Chemical process engineering
  - Power plants, boilers
  - Heat distribution (district heating)

Technical features

- Pt100 resistance thermometer acc. to IEC 751 (EN60751)
- Permissible mechanical and thermal stress acc. to DIN 43763
- 3-wire connection is standard
- Connected to the process with a screwed attachment welded on the protective tube
- The measuring insert can be exchanged or calibrated without closing down the process
- Measuring insert in either ceramic powder filled tube M40, or mineral insulated MK60, vibrationproof
- Protective tube stainless and acidproof steel
- Can be supplied with head mounted transmitter and local display as an option

Ordering

The requested sensor is selected from the table below
The colour code means:

Standard: Built of standard modules (short delivery time)

Variant: Modified standard modules
We are specialist in temperature measurement.
Please contact us and we shall do our utmost to solve your specific measuring task

Assembly **Measuring insert**

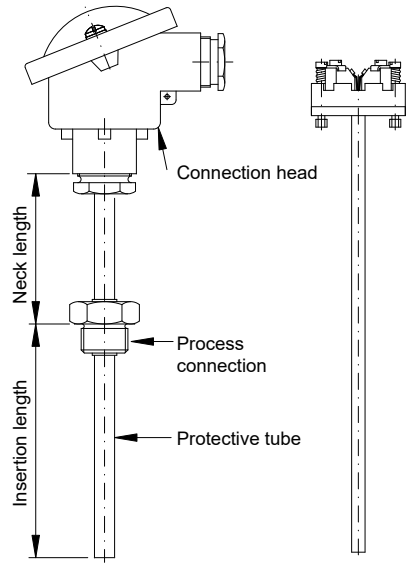

Ordering information

Sensor **Transmitter**

Specification number 1403- | | | | | | | | | | | | | | | **4mA: °C 20mA: °C** 2)

Protective tube

SS, acidproof steel, W.no. 1.4571 (AISI 316Ti)
Max. 600°C

9mm OD. 1mm wall	0
11mm OD. 2mm wall	1
15mm OD. 1.5mm wall (3/4" BSP recommended)	2

Neck length (mm)

25 (min.)	0
50	1
100	2
150	3
Special:	9

Insertion length (mm)

PS. for length > 400mm 15mm OD protective tube and 3/4"BSP are recommended

100	0100
150	0150
200	0200
250	0250
400	0400
Interim lengths (Min. 50, max. 3000)	xxxx

Process connection (see page 2)

1/2" BSP	0
3/4" BSP	1
1"BSP	2
1/2"NPT (Only for 11mm OD protective tube)	3

Connection head

B:	Degree of protection IP 54	0
BHS:	Degree of protection IP 65	1
BHSH:	Degree of protection IP 65, high cap for transmitter	2
B:	Degree of protection IP 54, BHX high cap for tranmitter	3
BHSH:	Degree of protection IP 65, high cap and local display 4552 *)	4

*) Only valid with transmitter

Accessesories

Measuring insert: See data sheet 9108-02
Transmitter: See data sheet 9168 Display: See data sheet 4552

Electrical connection

0	Terminalblock with screws
1	Transmitter FPTM (Sensor only as 3-wire)
5	Transmitter FPTU galvanic isolated.
7	Transmitter FPTU galvanic isolated. EEXiallCT4/6
d	Transmitter FPTH, galvanic isolated. Hart/SIL
e	Transmitter FPTH, galvanic isolated. Hart/SIL.EEXiallCT4/6
9	None. Without terminal block, flying ends for transmitter

Note 2: Please specify measuring range in °C

Connection. Wiring configuration

0	3-wire
1	4-wire
2	2-wire

Tolerance acc to IEC 751 (EN60751)

	Class	Value	Apply in the range for MK60	Apply in the range for M40
0	B	± (0.3°C + 0.005 x t_{actual})°C	-196+600°C	-50+400°C
1	A	± (0.15°C + 0.002 x t_{actual})°C	-100+450°C	-50+400°C
5	Special	± (0.05°C + 0.0013 x t_{actual})°C	-100+200°C	-50+200°C

Resistance value (Ω) acc. to IEC 751 (EN60751)

0	1 x Pt100
1	2 x Pt100 (MK60 max 8-wires, M40 max 6-wires)
2	1 x Pt1000

Measuring insert: Type and measuring range 1)

1	M40: -50 +400°C	Standard version, tube w/ceramic powder.
2	MK60: -196 +600°C	Mineral insulated. Vibration proof

Note 1:
Total permissible range.
Actual working range: Value listed in section tolerance class

AMETEK®
SENSORS, TEST & CALIBRATION

TECHNICAL DATA

All dimensions in mm

Dimensions

Assembly
Connection head

Type B / B+BHX Cap (for transmitter)

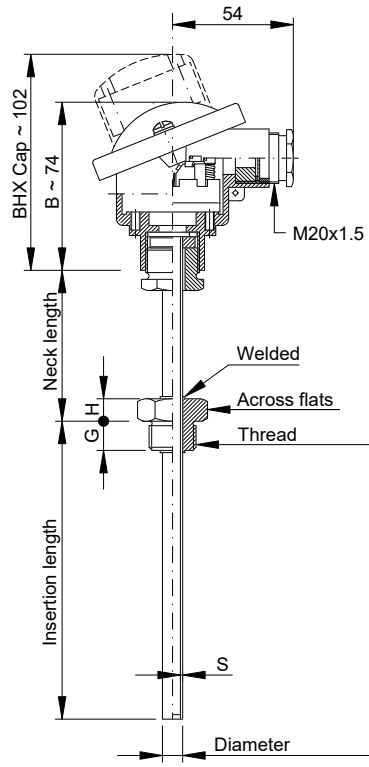

Type BHS / BHSH (for transmitter and display)

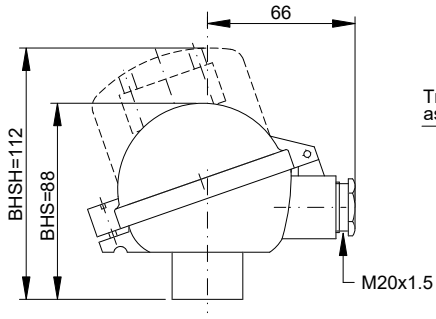

Measuring insert

Type M40 / MK60

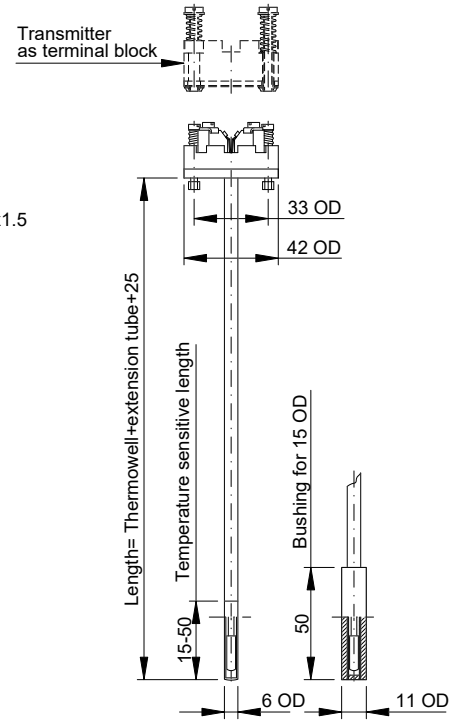

Process connection			
Thread	Across flats	G	H
1/2" BSP	27	13	10
1/2" NPT	27	15	13
3/4" BSP	32	14.5	12
1" BSP	41	17	14

Protective tube W.no. 1.4571	
Diameter	Wall thickness S
9	1
11	2
15	1.5

Installation of screw- in sensor

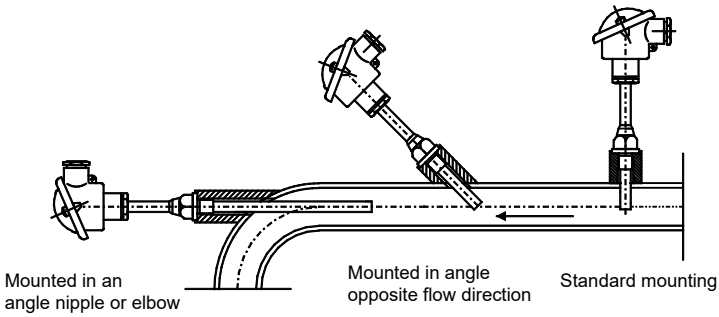

Mounted in an angle nipple or elbow

Mounted in angle opposite flow direction

Standard mounting

Insertion length

In order to minimize heat dissipation/conduction from sensor tip to the surroundings it is recommended to select the sensor length acc. to guidelines in below table.
The length of the sensor also has to concidered with regards to vibrations, shocks and resonance frequency. Here it is important to ensure that the sensor does not get too long if mounted in a very turbulent liquid medium.
The insertion depth should further be added to the physical length of the sensing element (TSL), which typical is 15-50 mm for RTD.

Medium	Dynamic	Static
Liquid	5 - 10 x dia.	10 - 20 x dia.
Air	10 - 20 x dia.	20 - 40 x dia.

Load for protective tube acc. to DIN 43772, material W.no. 1.4571

Partly as form 2/2G+8/9 acc. DIN 43772 *) note						
Protective tube - OD/ID		9/7	9/7	15/11	11/7	15/11
Process connection		1/2" BSP/NPT	1/2" or 3/4" BSP/NPT		1" BSP	
Torque on installation (max.)		50Nm	50Nm	50Nm	100Nm	100Nm
Maximum	Air	25	25	25	40	40
flow velocity	Superheated steam	25	25	25	40	40
(m/sec)	Water	3	3	3	5	5

*) note
Dynamic load in relation to pressure, media velocity, length and material see DIN 43772

Response time

Protective tube Diameter	Response time in seconds (guidelines)			
	In water @ 0.4m/sec.		In air @ 3m/sec.	
	$t_{0.5}$	$t_{0.9}$	$t_{0.5}$	$t_{0.9}$
9	20	65	115	340
11	25	80	120	360
15	30	90	140	410

Note:

The 0.5/0.9 time is the time that it takes the sensor to reach 50%/90% of the final value of a temperature change of a medium.
If media and velocity are different from the ones stated, the time can change significantly.

Connection diagram

*) for model FPTH see separate datasheet

3-wire configuration				4-wire			
Pt100 resistance		Transmitter FPTU *)	Transmitter FPTM *)	Pt100 resistance		Transmitter FPTU *)	
1xPt100 3-wire	2xPt100 3-wire			1xPt100 4-wire	2xPt100 4-wire		
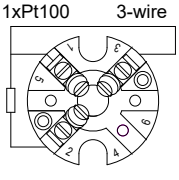	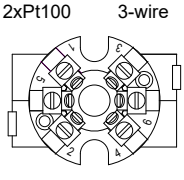	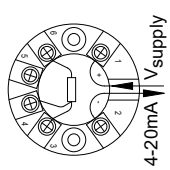	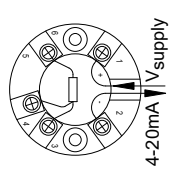	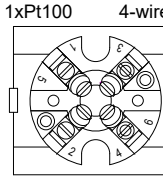	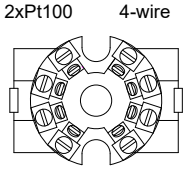	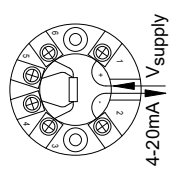	

AMETEK DENMARK A/S Gydevang 32-34, 3450 Allerød, DK, Tlf: 48168000, E-mail: jofra@ametek.com, Web: www.jofra.com

SS-FP-1403-UK. Version 202401

Frode Pedersen temperature sensors

Resistance Thermometer D

for welding with interchangeable insert

Data Sheet 1405

Application

- Temperature measurement in pipe systems and tanks with gasses and fluid medias such as air, steam and water at high pressure and flow velocity
- Operating range is up to 600°C, max. 450 bar (water) and 60 m/sec. (steam)
- Fields of application
  - Chemical process engineering
  - Power plants, boilers
  - Heat and energy distribution (district heating)

Technical features

- Pt100 resistance thermometer acc. to IEC 751 (EN60751)
- Permissible mechanical and thermal stress acc. to DIN 43772
- 3-wire connection is standard
- Installed to the process by welding
- The measuring insert can be exchanged or calibrated without closing down the process
- Measuring insert in either ceramic powder filled tube M40, or mineral insulated MK60, vibrationproof
- Thermowell drilled from bar stock
- Optionally, can be supplied with head mounted transmitter

Ordering

The requested sensor is selected from the table below
The colour code means:

Standard: Built of standard modules (short delivery time)

Variant: Modified standard modules

We are specialist in temperature measurement.
Please contact us and we shall do our utmost to solve your specific measuring task

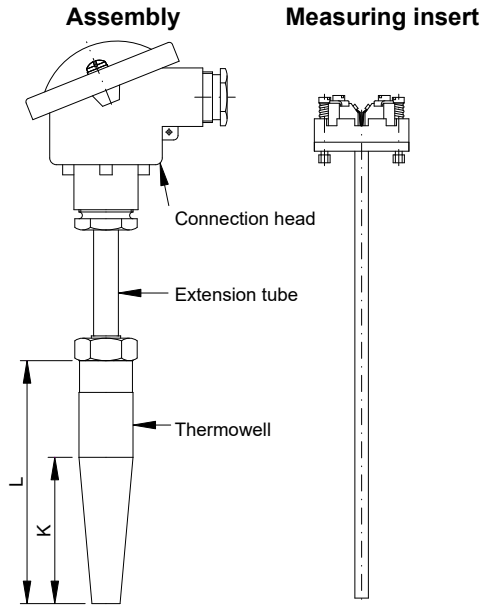

Ordering information

Specification number 1405- | Sensor | Transmitter | **4mA: °C 20mA: °C** 2)

Thermowell

Type: Form 4

D1	Length L=140	Conus K= 65	0
D2	Length L=200	Conus K=125	1
D4	Length L=200	Conus K= 65	2
D5	Length L=260	Conus K=125	3
None.	Insert for D1 (140)		a
None.	Insert for D2 (200)		b
None.	Insert for D4 (200)		c
None.	Insert for D5 (260)		d
Insert for special thermowell L (reguired)			9

Material:

None	0
W.no. 1.5415 16Mo3	1
W.no. 1.7335 13CrMo4-5	2
W.no. 1.4404 AiSi 316L	4

Thermowell/instrument connection:

M18x1.5 (Standard)	6
1/2" BSP	7
1/2" NPT	8

Extension tube (mm)

52	052
102	102
152	152
202	202
Special (Min. 52, max. 502)	xxx

Connection head

B:	Degree of protection IP 54	0
BHS:	Degree of protection IP 65	1
BHSH:	Degree of protection IP 65, high cap for transmitter	2
B:	Degree of protection IP 54, BHX high cap for tranmitter	3
BHSH:	Degree of protection IP 65, high cap and local display 4552 *)	4

*) Only valid with transmitter

Accessesories

Measuring insert	See data sheet 9108-02		
Transmitter:	See data sheet 9168	Display:	See data sheet 4552

Electrical connection

0	Terminalblock with screws
1	Transmitter FPTM (Sensor only as 3-wire)
5	Transmitter FPTU galvanic isolated.
7	Transmitter FPTU galvanic isolated. EEXiaIICT4/6
d	Transmitter FPTH, galvanic isolated. Hart/SIL
e	Transmitter FPTH, galvanic isolated. Hart/SIL.EEXiaIICT4/6
9	None. Without terminal block, flying ends for transmitter

Note 2: Please specify measuring range in °C

Connection. Wiring configuration

0	3-wire
1	4-wire
2	2-wire

Tolerance acc to IEC 751 (EN60751)

	Class	Value	Apply in the range for MK60	Apply in the range for M40
0	B	± (0.3°C + 0.005 x t_{actual})°C	-196+600°C	-50+400°C
1	A	± (0.15°C + 0.002 x t_{actual})°C	-100+450°C	-50+400°C
5	Special	± (0.05°C + 0.0013 x t_{actual})°C	-100+200°C	-50+200°C

Resistance value (Ω) acc. to IEC 751 (EN60751)

0	1xPt100
1	2xPt100 (MK60 max 8-wires, M40 max 6-wires)
2	1xPt1000

Measuring insert: Type and measuring range 1)

M40:	-50 +400°C	Standard version, tube w/ceramic powder.
MK60:	-196 +600°C	Mineral insulated. Vibration proof

Note 1:
Total permissible range.
Actual working range: Value listed in section tolerance class

AMETEK®
SENSORS, TEST & CALIBRATION

TECHNICAL DATA

All dimensions in mm

Dimensions

Assembly
Connection head

Type B / B+BHX Cap (for transmitter)

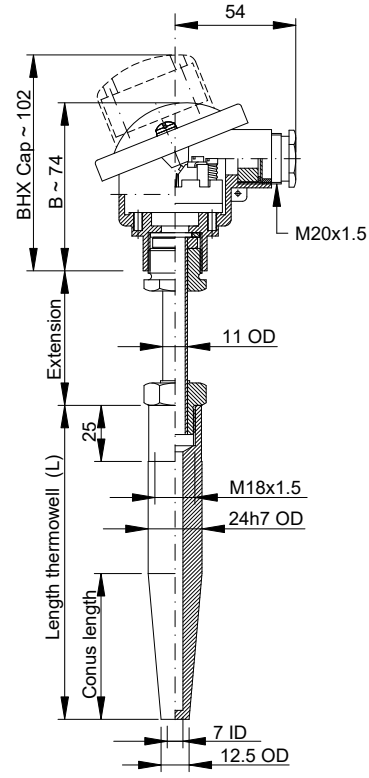

Type BHS / BHSH (for transmitter og display)

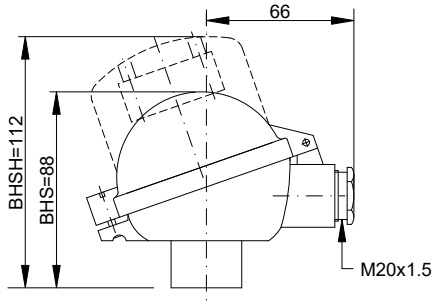

Measuring insert

Type M40 / MK60

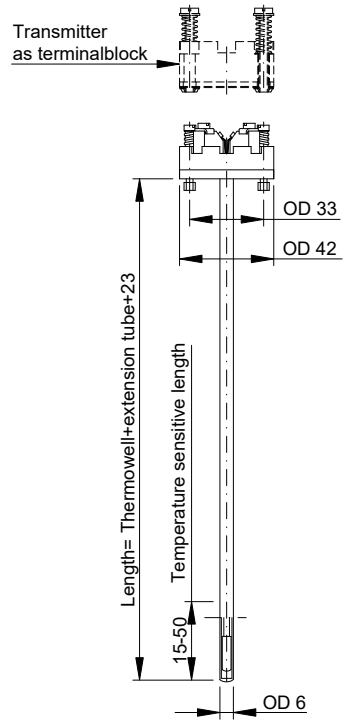

Installation of weld- in thermowell

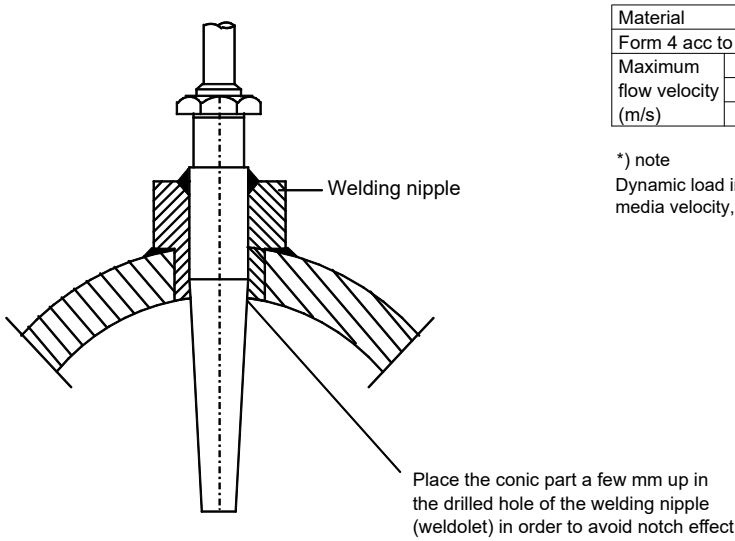

Load/stress for thermowell acc. to DIN 43772

Material		1.5415	1.7335	1.4404	
Form 4 acc to DIN 43772 *) note		D1/2/4/5	D1/2/4/5	D1, D4	D2, D5
Maximum flow velocity (m/s)	Air	60	60	60	60
	Superheated steam	60	60	60	30
	Water	5	5	5	5

*) note
Dynamic load in relation to pressure,
media velocity, length and material see DIN 43772

Response time

Thermowell	Response time in seconds (guidelines)					
	In water @ 0.4m/sec.		In air @ 1m/sec		In steam @ 40m/sec.	
	$t_{0,5}$	$t_{0.9}$	$t_{0.5}$	$t_{0.9}$	$t_{0.5}$	$t_{0.9}$
D1, D4	18	55	400	1200	55	148
D2 D5	12	47	315	1070	40	110

Note:

The 0.5/0.9 time is the time that it takes the sensor to reach 50%/90% of the final value of a temperature change of a medium.
If media and velocity are different from the ones stated, the time can change significantly.

Connection diagram *) for model FPTH se separat datablad

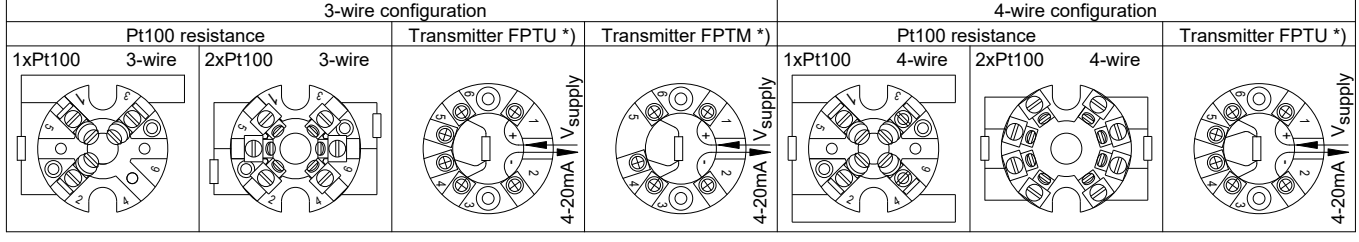

SS-FP-1405-UK. Version 202401

AMETEK DENMARK A/S Gydevang 32-34, 3450 Allerød, DK, Tlf: 48168000, E-mail: jofra@ametek.com,
Web: www.jofra.com

Frode Pedersen temperature sensors

Resistance Thermometer DS

for welding with interchangeable insert

Data Sheet 1406

Application

- Temperature measurement in pipe systems and tanks with gasses and fluid medias such as air, steam and water at high pressure and flow velocity
- Operating range is up to 600°C, max. 450 bar (water) and 60 m/sec. (steam)
- Fields of application
  - Chemical process engineering
  - Power plants, boilers
  - Heat distribution (district heating)

Technical features

- Pt100 resistance thermometer acc. to IEC 751 (EN60751)
- Permissible mechanical and thermal stress acc. to DIN 43772
- 3-wire connection is standard
- Connected to the process by welding
- The measuring insert can be exchanged or calibrated without closing down the process
- Thermowell drilled from bar stock. Quick response time
- Measuring insert is a mineral insulated type MK60, vibrationproof
- Optionally, can be supplied with head mounted transmitter

Ordering

The requested sensor is selected from the table below
The colour code means:

Standard: Built of standard modules (short delivery time)

Variant: Modified standard modules

We are specialist in temperature measurement.
Please contact us and we will do our best to solve your specific measuring task

Assembly **Measuring insert**

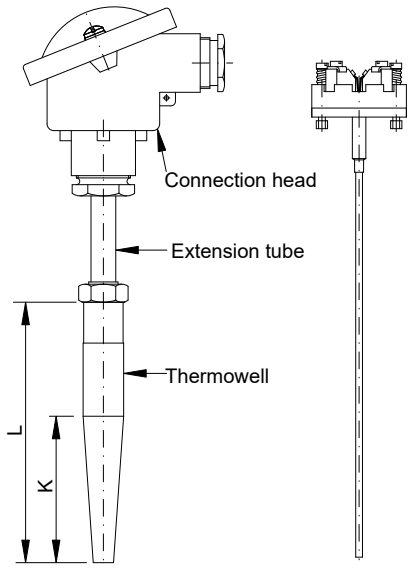

Ordering information

Sensor **Transmitter**

Specification number	1406-											4mA: °C 20mA: °C 2)

Thermowell

Type: Form F4

D5S	Length L=115	Cone K= 40	0
D4S	Length L=140	Cone K= 65	1
D4SS	Length L=200	Cone K= 65	2
None.	Insert for D5S (115)		a
None.	Insert for D4S (140)		b
None.	Insert for D4SS (200)		c

Material:

None		0
W.no. 1.7335	13CrMo4-5	1
W.no. 1.4404	AiSi 316L	3
W.no. 1.5415	16Mo3	4

Extension tube (mm)

52	0	5	2
102	1	0	2
152	1	5	2
202	2	0	2
Interim lengths (Min. 52, max. 502)	x	x	x

Connection head

B:	Degree of protection IP 54	0
BHS:	Degree of protection IP 65	1
BHSH:	Degree of protection IP 65, high cap for transmitter	2
B:	Degree of protection IP 54, with high cap BHX for transmitter	3

Electrical connection

0	Terminalblock with screws
1	Transmitter FPTM (Sensor only as 3-wire)
5	Transmitter FPTU galvanic isolated.
7	Transmitter FPTU galvanic isolated. EEXiallCT4/6
d	Transmitter FPTH, galvanic isolated. Hart/SIL
e	Transmitter FPTH, galvanic isolated. Hart/SIL.EEXiallCT4/6
9	None. Without terminal block, flying ends for transmitter

Note 2: Please specify measuring range in °C

Connection. Wiring configuration

0	3-wire
1	4-wire
2	2-wire

Tolerance acc to IEC 751 (EN60751)

	Class	Value	Apply in the range
0	B	± (0.3°C + 0.005 x t_{actual})°C	-196+600°C
1	A	± (0.15°C + 0.002 x t_{actual})°C	-100+450°C
5	Special	± (0.05°C + 0.0013 x t_{actual})°C	-100+200°C

Resistance value (Ω) acc. to IEC 751 (EN60751)

0	1xPt100
1	2xPt100 (only as 2-wire)
2	1xPt1000

Measuring insert: Type and measuring range 1)

0	MK60: -196 +600°C Mineral insulated, vibration proof

Note 1:
Total permissible range.
Actual working range: Value listed in section tolerance class

Accesesories

Measuring insert	See data sheet 9108-02
Transmitter:	See data sheet 9168

AMETEK®
SENSORS, TEST & CALIBRATION

TECHNICAL DATA

All dimensions in mm

Dimensions

Assembly
Connection head

Type B / B+BHX CAP (for transmitter)

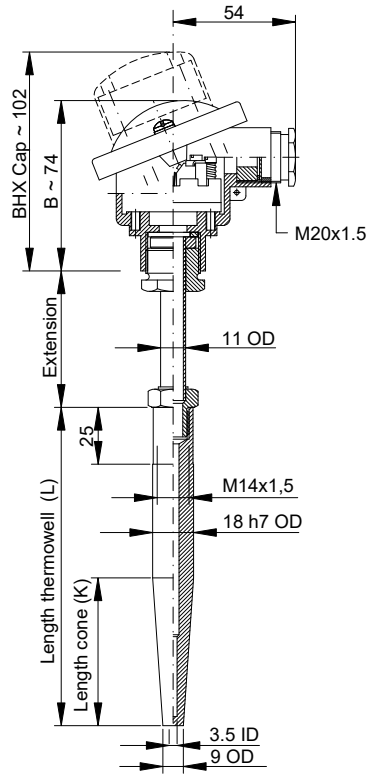

Type BHS / BHSH (for transmitter)

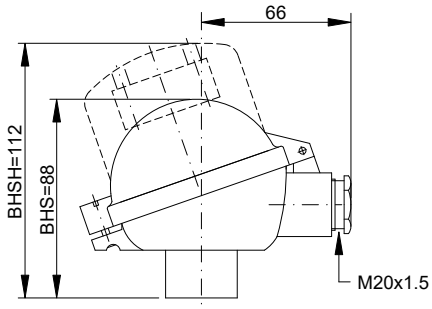

Measuring insert

Type MK60

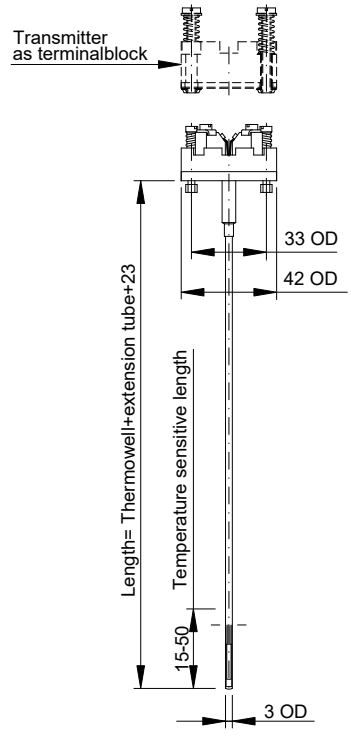

Installation of weld- in thermowell

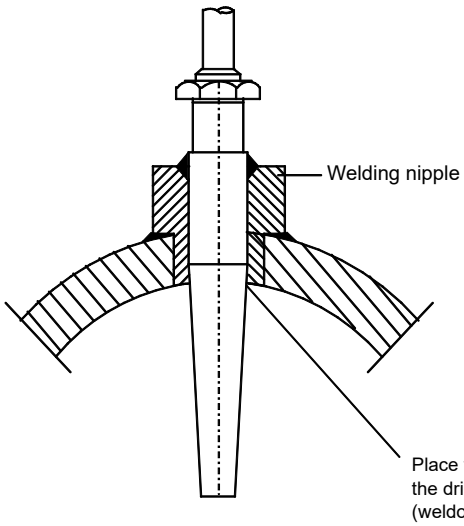

Place the conic part a few mm up in the drilled hole of the welding nipple (weldolet) in order to avoid notch effect

Load/stress for thermowell acc. to DIN 43772

Material		1.5415	1.7335	1.4404	
Form 4 acc to DIN 43772 *) note		DS	DS	DS	DS
Maximum flow velocity (m/s)	Air	60	60	60	60
	Superheated steam	60	60	60	30
	Water	5	5	5	5

*) note
Dynamic load in relation to pressure,
media velocity, length and material see DIN 43772

Response time

Thermowell	Response time in seconds (guidelines)					
	In water @ 0.4m/sec.		In air @ 1m/sec.		In steam @ 40m/sec.	
	$t_{0.5}$	$t_{0.9}$	$t_{0.5}$	$t_{0.9}$	$t_{0,5}$	$t_{0,9}$
DS/DSS	10	27	300	1035	5	8

Note:

The 0.5/0.9 time is the time that it takes the sensor to reach 50%/90% of the final value of a temperature change of a medium.
If media and velocity are different from the ones stated, the time can change significantly.

Connection diagram

*) for model FPTH se separat datablad

3-wire configuration				4-wire configuration			
Pt100 resistance		Transmitter FPTU *)	Transmitter FPTM *)	Pt100 resistance		Transmitter FPTU *)	
1xPt100 3-wire	2xPt100 3-wire			1xPt100 4-wire	2xPt100 4-wire		
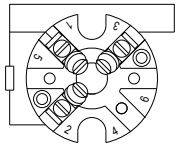	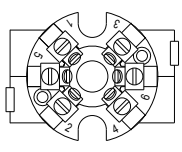	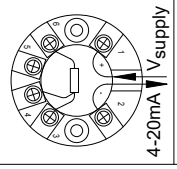	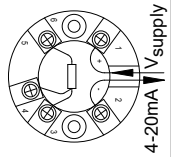	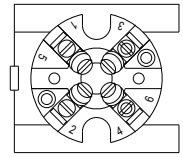	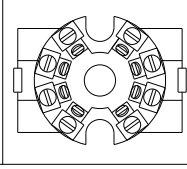	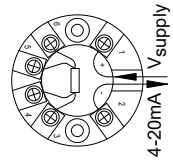	

SS-FP-1406-UK Version 202401

AMETEK DENMARK A/S Gydevang 32-34, 3450 Allerød, DK, Tlf: 48168000, E-mail: jofra@ametek.com,
Web: www.jofra.com

Frode Pedersen temperature sensors

Resistance Thermometer BH

With interchangeable insert and fast response time

Data sheet 1407

Application

- Measurement of temperature in pipes and containers with gaseous and liquids media, such as air, vapour, gasses, water and oil
- The operating range is up to 600°C, max. 50 bar and flow velocity up to 25m/sec (air)
- Fields of application
  - Chemical process engineering
  - Machine construction and enviromental engineering
  - Heat distribution (district heating)

Technical features

- Pt100 resistance thermometer acc. to IEC 751 (EN60751)
- Permissible mechanical and thermal stress acc. to DIN 43772
- 3-wire connection is standard
- Connected to the process with a screwed attachment welded on the protective tube
- The measuring insert can be exchanged or calibrated without closing down the process
- Measuring insert is a mineral insulated type MK60, vibrationproof
- Protective tube in stainless and acidproof steel with 6mm OD tip, i.e. fast response time
- Can be supplied with head mounted transmitter as an option

Ordering

The requested sensor is selected from the table below
The colour code means:

Standard: Built of standard modules (short delivery time)

Variant: Modified standard modules

We are specialist in temperature measurement.
Please contact us and we shall do our utmost to solve your specific measuring task

Assembly

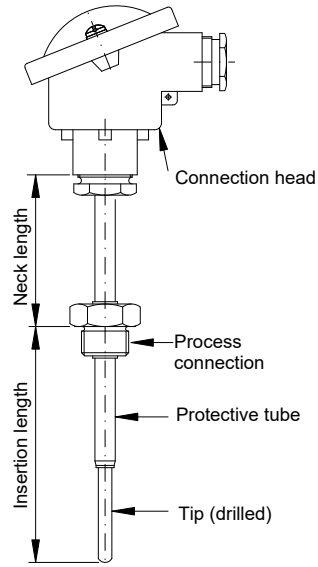

Measuring insert

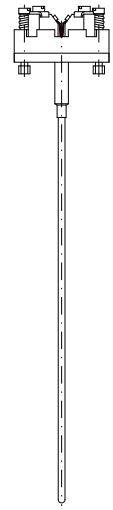

Ordering information — Sensor — Transmitter

Specification number 1407- [ ][ ][ ][ ][ ][ ][ ][ ][ ][ ][ ][ ][ ] **4mA: °C 20mA: °C** 2)

Protective tube

SS, acidproof steel, W.no. 1.4571 (AISI 316Ti)
Max. 600°C

9mm OD. 1mm wall. Tip: OD/ID=6/3.2mm	0
11mm OD. 2mm wall. Tip: OD/ID=6/3.2mm	1

Neck length (mm)

25 (min.)	0
50	1
100	2
150	3
Special:	9

Insertion length (mm)

100	0100
150	0150
200	0200
250	0250
400	0400
Interim lengths (Min. 80, max. 3000)	xxxx

Process connection (see page 2)

1/2" BSP	0
3/4" BSP	1
1"BSP	2
1/2"NPT (Only for 11 OD protective tube)	3

Connection head

B: Degree of protection IP 54	0
BHS: Degree of protection IP 65	1
BHSH: Degree of protection IP 65, high cap for transmitter	2
B: Degree of protection IP 54, BHX high cap for tranmitter	3

Electrical connection

0	Terminalblock with screws
1	Transmitter FPTM (Sensor only as 3-wire)
5	Transmitter FPTU galvanic isolated.
7	Transmitter FPTU galvanic isolated. EEXiallCT4/6
d	Transmitter FPTH, galvanic isolated. Hart/SIL
e	Transmitter FPTH, galvanic isolated. Hart/SIL.EEXiallCT4/6
9	None. Without terminal block, flying ends for transmitter

Note 2: Please specify measuring range in °C

Connection. Wiring configuration

0	3-wire
1	4-wire
2	2-wire

Tolerance acc to IEC 751 (EN60751)

	Class	Value	Apply in the range
0	B	± (0.3°C + 0.005 x t_{actual})°C	-196+600°C
1	A	± (0.15°C + 0.002 x t_{actual})°C	-100+450°C
5	Special	± (0.05°C + 0.0013 x t_{actual})°C	-100+200°C

Resistance value (Ω) acc. to IEC 751 (EN60751)

0	1xPt100
1	2xPt100 (only as 2-wire)
2	1xPt1000

Measuring insert: Type and measuring range 1)

0 0	MK60: -196 +600°C Mineral insulated. Vibration proof

Note 1:
Total permissible range.
Actual working range: Value listed in section tolerance class

Accessesories

Measuring insert: See data sheet 9108-02
Transmitter: See data sheet 9168

AMETEK®
SENSORS, TEST & CALIBRATION

TECHNICAL DATA

All dimensions in mm

Dimensions

Complete resistance thermometer assembly AF
Type B / B+BHX Cap (for transmitter)

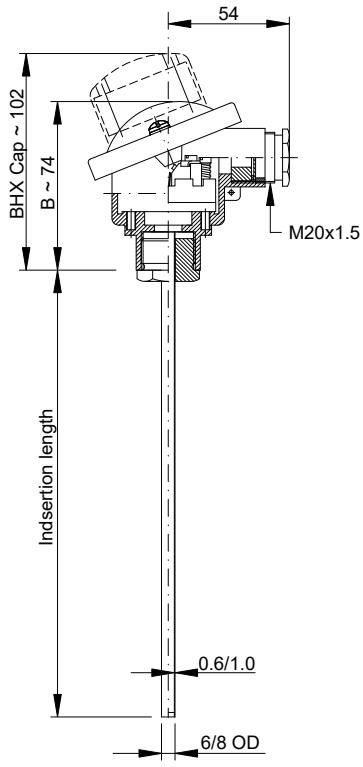

Fixed insert

Type BF

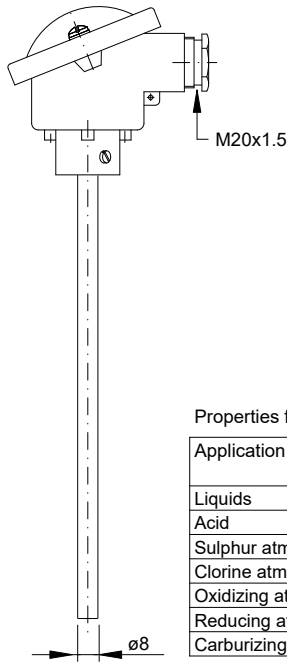

Measuring insert

Type M40 / MK60

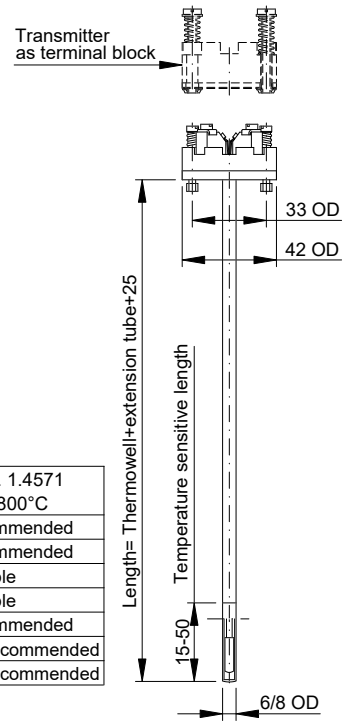

Properties for sheath

Application	W.no. 1.4571 max. 800°C
Liquids	Recommended
Acid	Recommended
Sulphur atmospheres	Suitable
Clorine atmospheres	Suitable
Oxidizing atmospheres	Recommended
Reducing atmospheres	Not recommended
Carburizing atmospheres	Not recommended

Process connection

Fig. 1

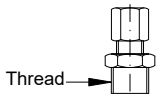

Compression fitting with steel ferrule		
Protective tube	Thread	Material
6/8 OD	1/4" BSP 3/8" BSP 1/2" BSP	SS steel W.no. 1.4571
6/8 OD	1/4" BSP 3/8" BSP 1/2" BSP	Steel galvanized

Fig. 2

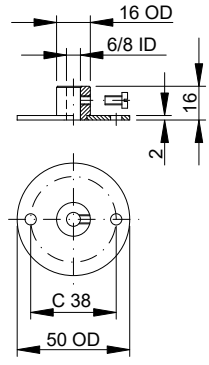

Adjustable flange	
Protective tube	Material
6/8 OD	Steel AISI 316

Response time

Sheath diameter	Response time in seconds (guidelines)			
	In water @ 0.4m/sec.		In air @ 3m/sec.	
	$t_{0,5}$	$t_{0,9}$	$t_{0,5}$	$t_{0,9}$
OD 6	7	20	48	151
OD 8	9	26	60	190

Note:

The 0.5/0.9 time is the time that it takes the sensor to reach 50%/90% of the final value of a temperature change of a medium.

If media and velocity are different from the ones stated, the time can change significantly.

Connection diagram

*) for model FPTH se separat datablad

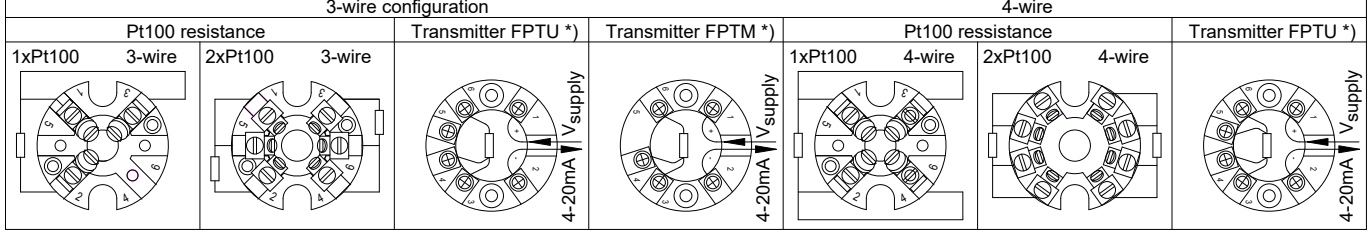

SS-FP-AF1408-UK. Version 202401

AMETEK DENMARK A/S Gydevang 32-34, 3450 Allerød, DK, Tlf: 48168000, E-mail: jofra@ametek.com,
Web: www.jofra.com

Frode Pedersen temperature sensors

Resistance Thermometer AF

measuring insert with connection head

Data sheet 1408

Application

- Measurement of temperature in ducts and furnaces with air and flue gasses
- The operating range is up to 600°C in the low-pressure range
- Fields of application
  - Heat and ventilation (HVAC)
  - Drying equipment
  - Machine construction and enviromental engineering

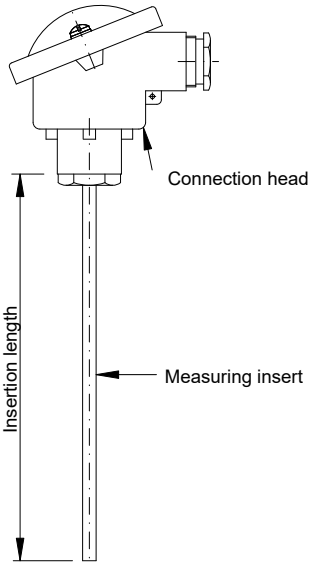

Technical features

- Pt100 resistance thermometer acc. to IEC 751 (EN60751)
- Built as an meauring insert acc. to DIN 43769
- 3-wire connection is standard
- Connected to the process by adjustable flange or compression fittings
- Measuring insert in either ceramic powder filled tube M40/BF, or mineral insulated MK60, vibrationproof
- Modular design and standard length minimize the necessary number of spares
- Can be supplied with head mounted transmitter as an option

Ordering

The requested sensor is selected from the table below
The colour code means:

Standard: Built of standard modules (short delivery time)

Variant: Modified standard modules

We are specialist in temperature measurement.
Please contact us and we shall do our utmost to solve your specific measuring task

Ordering information

Sensor | **Transmitter**

Specification number | **4mA: °C 20mA: °C** 1)

Measuring insert diameter

SS, acidproof steel, W.no. 1.4571 (AISI 316Ti)

Max. 600°C

6mm OD (Mineral insulated)	0
8mm OD (Standard tube powder filled):	1
6mm OD w/3x25mm tip *)	2

*) Max 200°C. Use code 4 under meas. insert

Insertion length (mm)

200	0	1	0	0
250	0	2	5	0
300	0	3	0	0
450	0	4	5	0
Interim lengths (Min. 50, max. 3000)	x	x	x	x

Process connection (see page 2)

None	0
Fig. 1 1/4" BSP compression fittings. Stainless steel	1
Fig. 1 1/2" BSP compression fittings. Stainless steel	3
Fig. 2 Adjustable flange	7

Connection head

B: Degree of protection IP 53	0
B: Degree of protection IP 53, BHX high cap for tranmitter	1

Electrical connection

0	Terminalblock with screws
1	Transmitter FPTM (Sensor only as 3-wire)
5	Transmitter FPTU galvanic isolated.
7	Transmitter FPTU galvanic isolated. EEXiallCT4/6
d	Transmitter FPTH, galvanic isolated. Hart/SIL
e	Transmitter FPTH, galvanic isolated. Hart/SIL.EEXiallCT4/6
9	None. Without terminal block, flying ends for transmitter

Note 2: Please specify measuring range in °C

Connection. Wiring configuration

0	3-wire
1	4-wire
2	2-wire

Tolerance acc. to IEC 751 (EN60751)

	Class	Value	Apply in the range for MK60	Apply in the range for M40/BF
0	B	± (0.3°C + 0.005 x t_{actual})°C	-196+600°C	-50+400°C
1	A	± (0.15°C + 0.002 x t_{actual})°C	-100+450°C	-50+400°C
5	Special	± (0.05°C + 0.0013 x t_{actual})°C	-100+200°C	-50+200°C

Resistance value (Ω) acc. to IEC 751 (EN60751)

0	1xPt100
1	2xPt100
2	1xPt1000

Measuring insert: Type and measuring range 1)

MK60:	-196 +600°C	Mineral insulated. Vibration proof
M40:	-50 +400°C	Std. version, tube w/powder.
BF:	-50 +400°C	Fixed insert in std. version, tube w/powder.
BFS:	-50 +200°C	Fixed insert. With 3 mm OD tip.

Note 1:
Total permissible range.
Actual working range: Value listed in section tolerance class.
For BFS only: -50+200°C

Accesesories

Process connection: See data sheet 9113 Measuring insert: See data sheet 9108-02
Transmitter: See data sheet 9168

AMETEK®
SENSORS, TEST & CALIBRATION

TECHNICAL DATA

All dimensions in mm

Dimensions

Complete resistance thermometer assembly AF
Type B / B+BHX Cap (for transmitter)

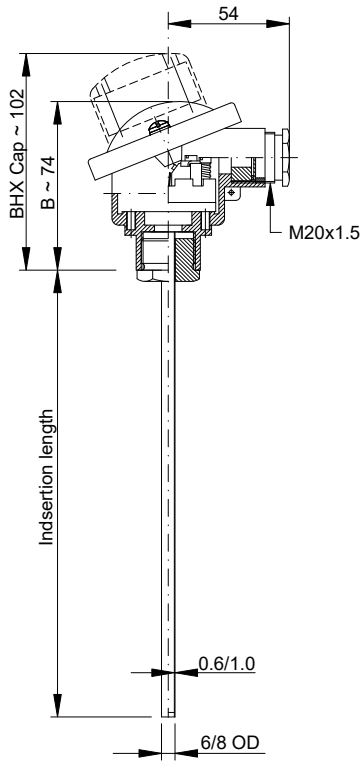

Fixed insert
Type BF

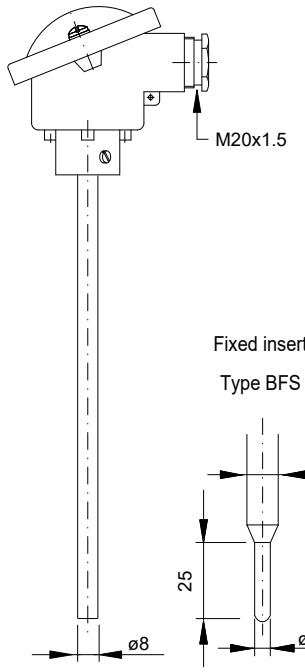

Fixed insert
Type BFS

Properties for sheath

Application	W.no. 1.4571 max. 800°C
Liquids	Recommended
Acid	Recommended
Sulphur atmospheres	Suitable
Clorine atmospheres	Suitable
Oxidizing atmospheres	Recommended
Reducing atmospheres	Not recommended
Carburizing atmospheres	Not recommended

Measuring insert
Type M40 / MK60

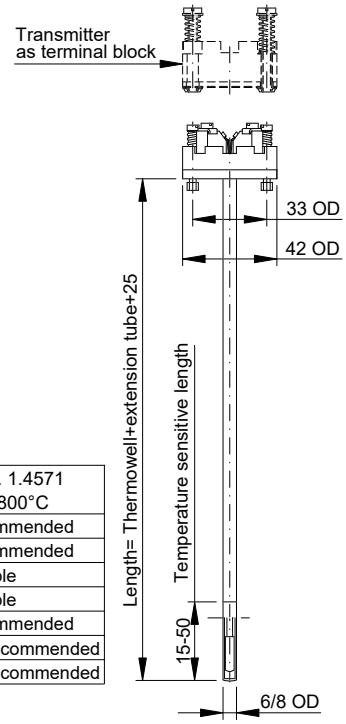

Process connection

Fig. 1

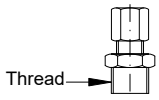

Compression fitting with steel ferrule		
Protective tube	Thread	Material
6/8 OD	1/4" BSP	SS steel
	3/8" BSP	W.no. 1.4571
	1/2" BSP	
6/8 OD	1/4" BSP	Steel
	3/8" BSP	galvanized
	1/2" BSP	

Fig. 2

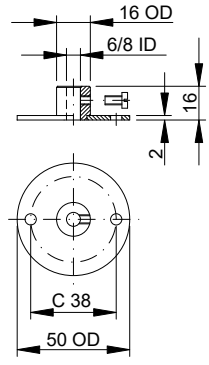

Adjustable flange	
Protective tube	Material
6/8 OD	Steel AISI 316

Response time

Sheath diameter	Response time in seconds (guidelines)			
	In water @ 0.4m/sec.		In air @ 3m/sec.	
	$t_{0,5}$	$t_{0,9}$	$t_{0,5}$	$t_{0,9}$
OD 6	7	20	48	151
OD 8	9	26	60	190
OD 6 with 3mm OD tip			10	35

Note:

The 0.5/0.9 time is the time that it takes the sensor to reach 50%/90% of the final value of a temperature change of a medium.

If media and velocity are different from the ones stated, the time can change significantly.

Connection diagram *) for model FPTH se separat datablad

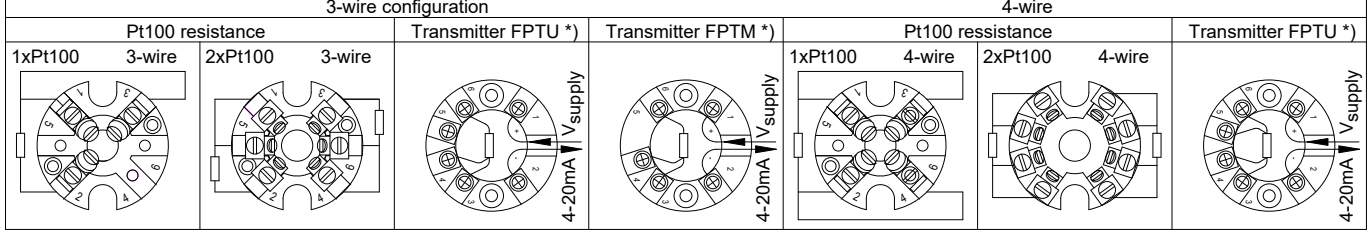

SS-FP-AF1408-UK. Version 202401

AMETEK DENMARK A/S Gydevang 32-34, 3450 Allerød, DK, Tlf: 48168000, E-mail: jofra@ametek.com, Web: www.jofra.com