

COINING™

AMETEK
COMPONENTS AND WIRE

Gold Washers in High-Performance Medical Electronics

This whitepaper delves into the unique properties of gold, the brazing process, and the specific advantages that make gold brazing a preferred method in the creation of reliable and biocompatible implantable devices.

Gold Washers in High-Performance Medical Electronics: A Technical Breakthrough

Gold Washers are bio-compatible braze materials used to create hermetic seals in electrical feedthroughs. Gold stands as the premier choice for designers crafting high-performance electronic circuits, because of its exceptional metallurgical properties.

COINING's expertise in leveraging gold washers to create hermetic seals in electrical feedthroughs ensures optimal performance, reliability, and compatibility. COINING takes precision to new heights with our in-house technological capabilities. Our commitment to high aspect ratios ensures that components maintain structural integrity while meeting the demanding size constraints of implantable devices.



Medium Sized Au Washers: OD: .212" ID: .192 THK: .0145"

Vacuum Braze Compliant

Gold Washers are vacuum braze compliant, exhibiting extremely low vapor pressure during the brazing process. As a result, the washers remain stable without vaporizing, preventing any coating on the chamber's interior. This enables the added benefit of maintaining the volume of the material by not losing it to vaporization.

Corrosion Resistance

Corrosion poses a significant threat to metals, especially in environments marked by heat and humidity. COINING prioritizes corrosion resistance by strategically selecting high purity ≥ 99.99% gold to enhance the washer's ability to withstand oxidation. We have a dedicated gold manufacturing process to prevent cross contamination with base metal alloys. We work collaboratively with our customer's design needs.

Biocompatibility

As pacemakers and neurostimulators continue to drive the medical industry by playing a crucial role in enhancing lives. COINING ensures our materials meet the stringent requirements of implantable devices, contributing to overall health and well-being.

Vertically Integrated

We take pride in our vertically integrated manufacturing process, which allows us to maintain complete control and oversight over every aspect of production. From raw materials to finished products, we handle each stage in-house, ensuring quality, efficiency, and flexibility every step of the way. Our melt capabilities further enhance this process, empowering us to manage the melting of materials internally, resulting in precise control over composition and quality assurance.

Advancements in Medical Device Manufacturing

Designed to meet the specific requirements of medical device manufacturers, our gold washers offer industry-leading properties. They deliver exceptional precision in controlling braze volume, making them the ideal solution for achieving biocompatible braze joints and hermetic feedthroughs.

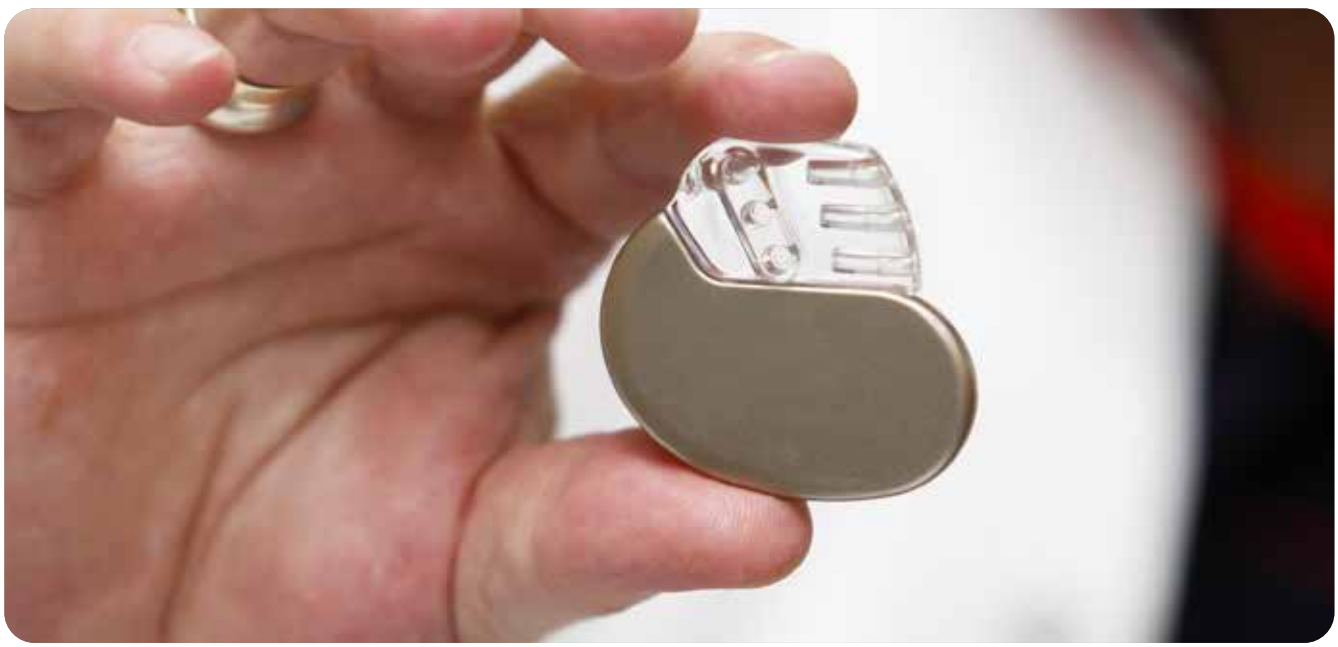

Meeting Performance Parameters

COINING's Gold Washers are designed to meet and exceed performance parameters. Whether it's strength, corrosion resistance, or hermetic sealing, we ensure that each component aligns with the specific requirements of the medical product. This approach ensures reliability and longevity of medical devices in real-world applications.

Melting Temperature

Gold brazing is done at high temperatures ~1100°C.

Joint Strength

The choice of gold-based alloys ensures strong and reliable joints. The strength of joints in implantable devices is paramount to their durability and performance within the human body. Gold brazing, delivers robust joints capable of withstanding mechanical stresses and loads experienced by implants, ensuring longevity and reliability in medical applications.

Precision and Micro-Brazing

Implantable devices often have intricate and small components. Gold brazing allows for precision joining, making it suitable for micro-brazing applications where a high level of accuracy is required.

Hermetic Sealing

Gold brazing can be employed to create hermetic seals, ensuring a complete and reliable enclosure for sensitive components. This is vital in implantable devices to prevent ingress of contaminants and maintain the sterility of the internal environment.



Medium Au Washers OD: .212" ID: .192 THK: .0145" Large Au Washers OD: 1.142 ID: 1.063 THK: .004

Advancements in Medical Device

We have long standing expertise with integrated tool design and manufacturing micro stamped and micro size parts. These capabilities are particularly valuable in the fabrication of medical implants with delicate components requiring meticulous attention to detail.

Gold Washer Available Sizing and Dimensions

Our gold washers are available in a wide range of sizes from as small as Ø.016 x Ø.009 x .004 to as large as Ø1.211 x Ø1.189 x .024.

Preforms are highly customizable: diameters and thickness.

Key Advantages:

- Biocompatibility
- High purity
- Accurate volume control
- Low vapor pressure suitable for vacuum brazing, and a melting temperature compatible with commercially available brazing furnaces.
- Conforms to environmental standards such as RoHS, REACh, PFAS, CA Prop 65, and TSCA compliance.

Specifications and Applications:

- Raw material IAW ASTM B562, Grade 1.1.3

Applications include:

- Pacemakers
- Neurostimulators
- Cochlear Implants
- DBS (Deep Brain Stimulator)





Brazed Feedthrough Production Cycle

BRAZING

BRAZING COMPONENTS ARE ASSEMBLED

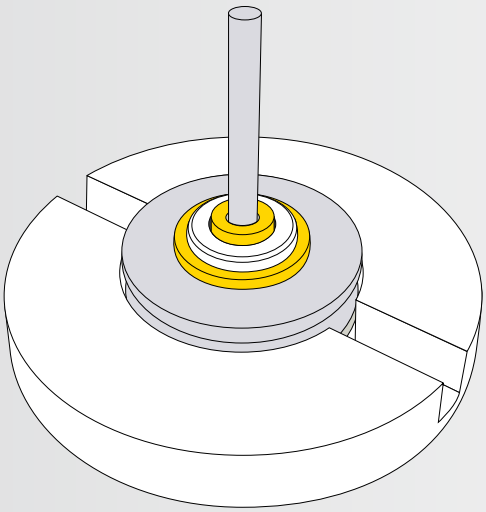

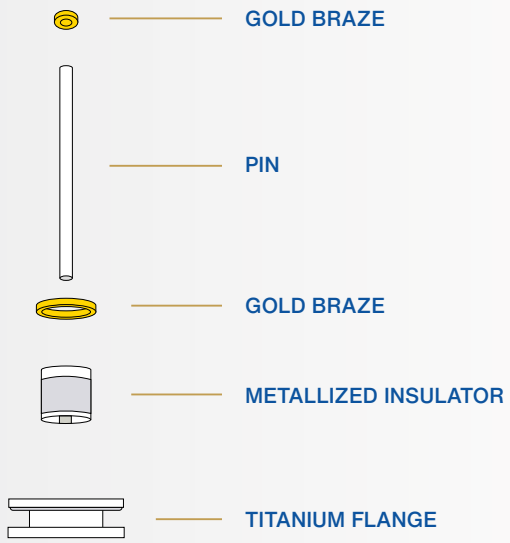

BRAZING

FEEDTHROUGH IS VACUUM BRAZED

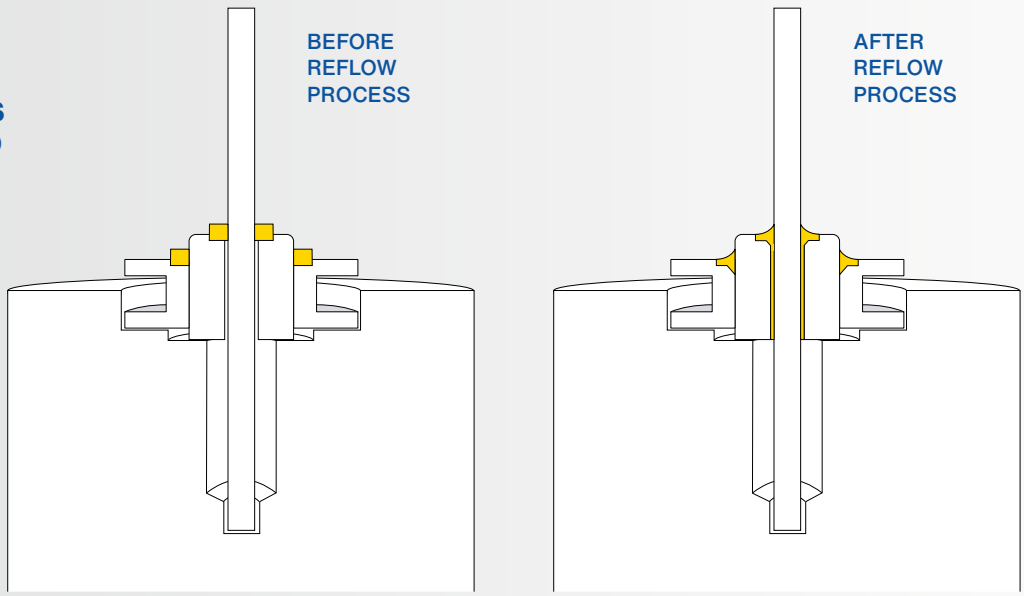

Compatibility with Other Materials

Gold brazing can be used to join gold to other materials commonly used in medical implants, such as titanium or stainless steel. This compatibility enhances the versatility of the manufacturing process.



Toolmaking

We have over 15,000 tools to create your custom designs. Our tools are durable, precise, and custom-made to create high-performance and high-precision components of any shape and size. Our fully equipped tool die department has wire EDM capability. This brings craftsmanship and modern technology together to satisfy your every need. Our standard tooling list is available upon request.

Quality Assurance

Strict quality assurance measures are implemented during the manufacturing process to ensure that the joints meet the required standards. Visual and dimensional testing are employed for accuracy and consistency.

Fully Integrated Manufacturing

COINING's approach to manufacturing sets us apart from the competition. We offer a fully integrated manufacturing process, from design to delivery. This seamless integration ensures a cohesive and streamlined production cycle, delivering a comprehensive solution for the fabrication of gold-brazing components.

Efficiency through Shorter Lead Times

In the fast-paced world of medical technology, efficiency is paramount. The combination of our high-speed machinery, advanced tooling expertise, and a commitment to streamlined processes allows us to achieve shorter lead times compared to our competitors.

Why You Should Partner With COINING

In the ever-evolving landscape of medical electronics, COINING remains at the forefront, our commitment to excellence in design ensures that the demands of implantable devices are met with cutting-edge reliable technology. We have automated processes and are fully integrated with existing assembly procedures.









COINING at a Glance

COINING, a world-class AMETEK brand, creates micro components that have a big impact on people's lives. From sensors to satellites, there isn't much happening in the world today that doesn't include the products we make. We create bonding solutions for lifetime connections.

For people who demand precision, flexibility, and speed, COINING is the world leader in custom alloys and solder preforms. We also offer specialized bonding wire, precision thermal management materials, and hermetic solutions. In fact, we're the largest solder preform manufacturer in the world. With a broad range of products, the most extensive library of preform dies in the industry — over 15,000 different tools, and our very own COINING Labs with analytical capabilities, and custom alloy development. We can move faster-to-market than anyone else.

AMETEK, Inc. is a leading global provider of industrial technology solutions serving a diverse set of attractive niche markets with annual sales over $7.0 billion.

COINING™

AMETEK®
COMPONENTS AND WIRE

AMETEK COINING
15 Mercedes Drive, Montvale, NJ 07645, UNITED STATES
E: Coining.info@ametek.com | **T:** +1 201 791 4020
www.ametek-coining.com

Scan for more information

The data herein is subject to revision without notice. Since AMETEK products, the information given and recommendations made herein may be used under conditions beyond our control, AMETEK makes no guarantee, either expressed or implied, concerning the suitability of our products, or the applicability and accuracy of the information or recommendations, in any specific situation. User is solely responsible for determining the suitability of AMETEK products for any specific purpose.

V1-04-24