EN2997 Y(YE)

QUALIFIED PRODUCT

Product Description

Sealtron is a manufacturer of EN2997 Y and YE hermetic connectors and is qualified to the ASD (formerly known as Association Europeene des Constructeurs de Materiel Aerospatial or AECMA) specification. We offer a full range of receptacles: EN2997-005 Class Y and YE, EN2997-006 Class Y & YE and EN2997-007 Class Y & YE in shell sizes 8 thru 18.

Principle design features include: metal-to-metal grounding between receptacles and mating plugs, passivated stainless steel shell material and Gold plated electrical contacts with solder cup terminations. The product is qualified to operate up to 260° Celsius (cyclical) and will withstand an extended range of fluids in an aerospace environment.

Sealtron can also develop and manufacture products that meet the design requirements for EN2997, but have custom features, such as eyelet style terminations on their electrical contacts or thermocouple (Type K) pins.

Sealtron's quality system is registered to AS9100 and ISO 9001:2000. The company is also a manufacturer of U. S. Military qualified product to MIL-DTL-26482 Series I & II, MIL-DTL-38999 Series I, II, & III and MIL-DTL-83723 and of ESC 10 connectors to the SBAC specification.

EN Part Numbering Systems

Connector types will be identified in the following manner:

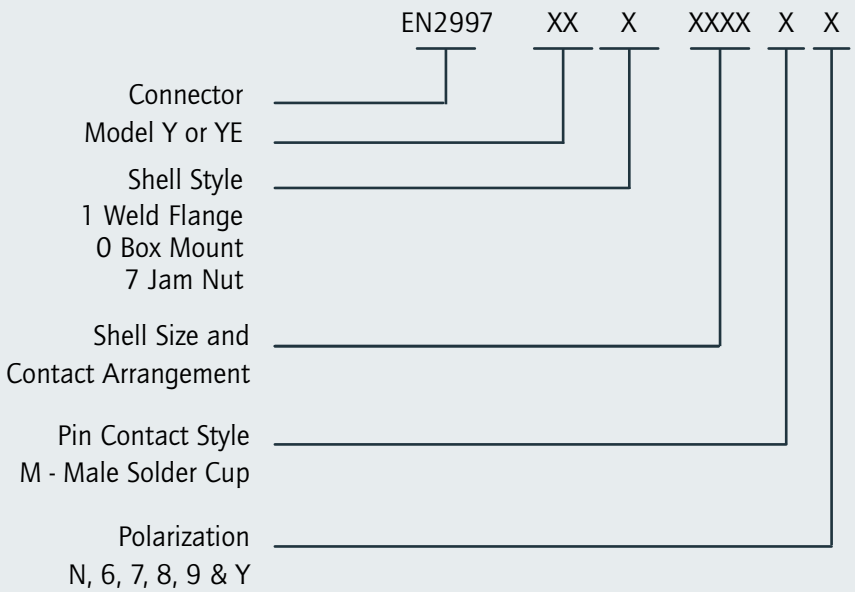

EN2997 Y(YE)

QUALIFIED PRODUCT

SEALTRON™ / AMETEK ENGINEERED INTERCONNECT AND PACKAGING

Insert Arrangements

Engaging face of pin insert shown

Other arrangments as shown in MIL-Std-1554 available by special order.

Contact factory for availability

8
10

8-03
3 #20



8-48
3 #20



10-02
2 #20



10-05
5 #20



10-06
6 #20



12
14

12-03
3 #16

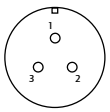

12-12
12 #20

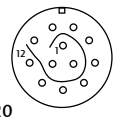

14-04
4 #12

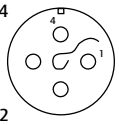

14-07
7 #16

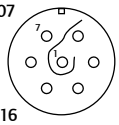

14-12
9 #20
3 #16

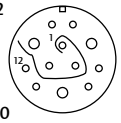

14-15
15 #20

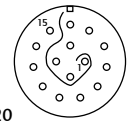

16
18

16-10
10 #16

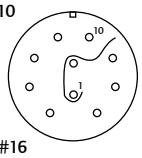

16-24
24 #26

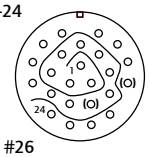

18-06
6 #10

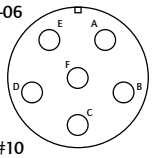

18-08
8 #12

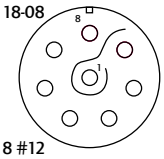

18-14
14 #16

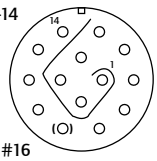

18-31
31 #20

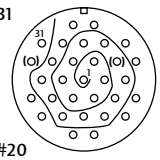

EN2997 Y(YE)

QUALIFIED PRODUCT

SEALTRON™ / AMETEK ENGINEERED INTERCONNECT AND PACKAGING

EN2997 Y (E)1

Round flange mount

Shell size	ØA				ØB				ØF		G Thread BS 1580 Class 2A
	MAX		MIN		MAX		MIN		MAX		
	mm	Inch	mm	Inch	mm	Inch	mm	Inch	mm	Inch	
08	18.36	0.723	17.86	0.703	12.70	0.500	12.55	0.494	14.27	0.562	0.5625-24 UNEF
10	21.59	0.850	21.08	0.830	14.27	0.562	14.12	0.556	17.68	0.696	0.6875-24 UNEF
12	26.80	1.055	26.29	1.035	19.05	0.750	18.90	0.744	22.23	0.875	0.8750 -20 UNEF
14	27.94	1.100	27.43	1.080	20.62	0.812	20.47	0.806	23.77	0.936	0.9375-20 UNEF
16	30.99	1.220	30.48	1.200	23.80	0.937	23.65	0.931	26.97	1.062	1.0625-18 UNEF
18	34.39	1.354	33.78	1.330	26.97	1.062	26.82	1.056	30.15	1.187	1.1875-18 UNEF

Contact Size	H			
	MAX		MIN	
	mm	Inch	mm	Inch
20	4,93	0.194	3,40	0.134
16 & 12	5,69	0.224	4,17	0.164

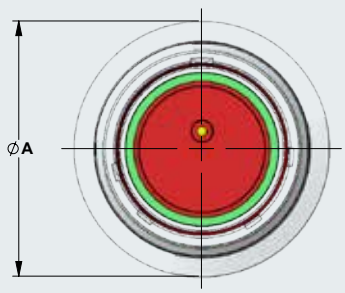

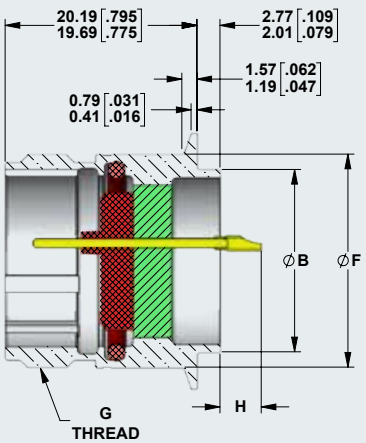

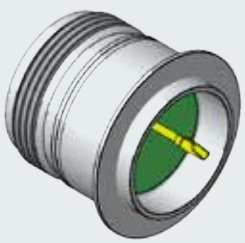

EN2997 Y(YE)

QUALIFIED PRODUCT

SEALTRON™ / AMETEK ENGINEERED INTERCONNECT AND PACKAGING

EN2997 Y (E)0

Square flange mount

Shell size	A		B				ØC					ØK		L Thread BS 1580 Class 2A	ØG			
			MAX		MIN			MAX		MIN		MAX			MAX		MIN	
	mm	Inch	mm	Inch	mm	Inch		mm	Inch	mm	Inch	mm	Inch		mm	Inch	mm	Inch
08	15.09	0.594	20.75	0.817	20.49	0.807						14.27	0.562	0.5625-24 UNEF	12,70	0.500	12.55	0.494
10	18.26	0.719	23.93	0.942	23.67	0.932						17.68	0.696	0.6875-24 UNEF	14.27	0.562	14.12	0.556
12	20.62	0.812	26.32	1.036	26.06	1.026						22.23	0.875	0.8750 -20 UNEF	19.05	0.750	18.90	0.744
14	23.01	0.906	28.71	1.130	28.45	1.120						23.77	0.936	0.9375-20 UNEF	20.62	0.812	20.47	0.806
16	24.61	0.969	31.88	1.255	31.62	1.245						26.97	1.062	1.0625-18 UNEF	23.80	0.937	23.65	0.931
18	26.97	1.062	34.24	1.348	33.98	1.338						30.15	1.187	1.1875-18 UNEF	26.97	1.062	26.82	1.056

Contact Size	E			
	MAX		MIN	
	mm	Inch	mm	Inch
20	4,93	0.194	3,40	0.134
16 & 12	5,69	0.224	4,17	0.164

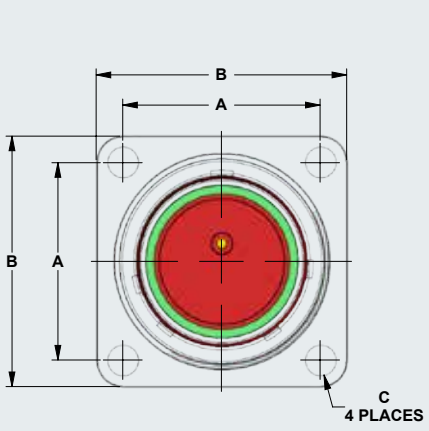

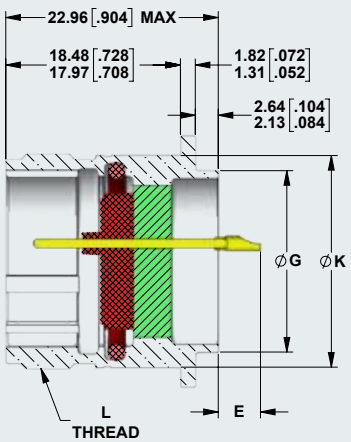

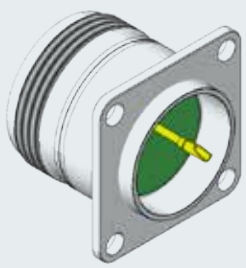

EN2997 Y(YE)

QUALIFIED PRODUCT

SEALTRON™ / AMETEK ENGINEERED INTERCONNECT AND PACKAGING

EN2997 Y (E)7

Jam Nut Mount

Shell size	A				ØC				E				F Thread BS 1580 Class 2A	G Thread BS 1580 Class 2A	ØK	
	MAX		MIN		MAX		MIN		MAX		MIN				MAX	
	mm	Inch	mm	Inch	mm	Inch	mm	Inch	mm	Inch	mm	Inch			mm	Inch
08	24.89	0.980	24.10	0.949	27.38	1.078	26.59	1.047	3.48	0.137	2.46	0.097	0.6250 -20 UN	0.5625-24 UNEF	14.27	0.562
10	28.04	1.104	27.25	1.073	30.28	1.192	29.49	1.161					0.7500-20 UNEF	0.6875-24 UNEF	17.68	0.696
12	32.79	1.291	32.00	1.260	35.05	1.380	34.26	1.349					0.9375-20 UNEF	0.8750-20 UNEF	22.23	0.875
14	35.33	1.391	34.54	1.360	38.51	1.516	37.72	1.485					1.0000-20 UNEF	0.9375-20 UNEF	23.77	0.936
16	38.51	1.516	37.72	1.485	41.68	1.641	40.89	1.610					1.1250-18 UNEF	1.0625-18 UNEF	26.97	1.062
18	41.68	1.641	40.89	1.610	44.86	1.766	44.07	1.735					1.2500-18 UNEF	1.1875-18 UNEF	30.15	1.187

Shell size	M				M			
	Contact size 20				Contact size 16 & 12			
	mm	Inch	mm	Inch	mm	Inch	mm	Inch
8 to 20	4,57	0.180	3,05	0.120	5,33	0.210	3,81	0.150

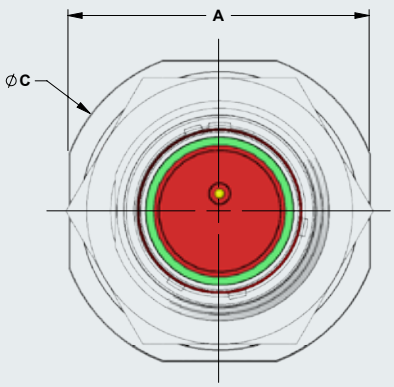

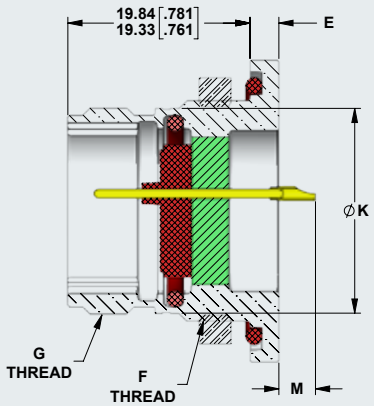

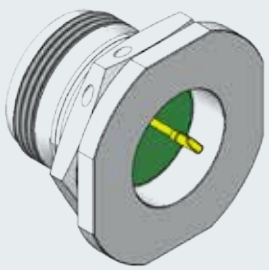

EN2997 Y(YE)

QUALIFIED PRODUCT

GENERAL SPECIFICATIONS	
Temperature	
Class Y	- 65° C to + 200°C
Class YE	- 65° C to + 260°C cyclical
Amperage	
#16 Contact	11 A
#12 Contact	20 A
Fluid Immersion	
Synthetic Lube Oil	Per MIL-L-23699
Hydraulic Fluid	Per MIL-H-5606
Ethylene Glycol	Per MIL-A-8243
1,1,1, Trichloroethane	Kerosene MIL-T-5624
Skydrol LD4	
Freon TF	Per MIL-C-81302
Bromoclоromethane	MIL-B-4394
White Spirit BS 245	(Stoddard Solvent)
Genklene BS 4487	
Air Leakage (Hermeticity)	Leakage rate less than 0.01 microns per cubic foot per hour (1×10^{-7} cc/sec) of Helium at 15 psi.

INSERT RETENTION		
Shell Size	Test Pressure kPa	Test Pressure lbf/in2
8 to 12	1035	150
14 to 18	690	100

DIELECTRIC WITHSTANDING VOLTAGE		
Altitude	Test Voltage	Duration
Sea Level	1500v rms 45-65 Hz	60 secs
70,000 ft.	1375v rms 45-65 Hz	60 secs

Thermal Shock:

No evidence of damage detrimental to the operation of connector after testing at less than 4°C (39°F) to greater than 90°C (204°F).

EN2997 Y(YE)

QUALIFIED PRODUCT

Master Keyway Positions

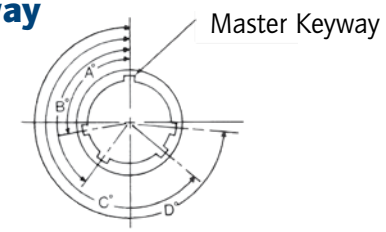

Position	Size 08				Size 10				Size 12 Thru			
	A°	B°	C°	D°	A°	B°	C°	D°	A°	B°	C°	D°
Normal	105	140	215	265	105	140	215	265	105	140	215	265
6	102	132	248	320	102	132	248	320	18	149	192	259
7	80	118	230	312	80	118	230	312	92	152	222	342
8	35	140	205	275	35	140	205	275	84	152	204	334
9	64	155	234	304	64	155	234	304	24	135	199	240
Y	N/A	N/A	N/A	N/A	25	115	220	270	98	152	268	338

SEALTRON™ AMETEK ENGINEERED INTERCONNECT AND PACKAGING

E: sealtron.info@ametek.com | **T:** +1 513 733 8400

www.sealtron.com

Scan for more information