ESC 10 YE

QUALIFIED PRODUCT



Product Description

Sealtron offers Qualified ESC 10 YE connectors in addition to the United States Military Qualified Product (Q.P.L) of MIL-C-26482 I & II, MIL-DTL-38999 I,II &III and MIL-DTL-83723.

These hermetic connectors are Qualified to technical specification No. T300™ qualified for SAE ITC aerospace industry standard parts (ESC Series). In addition, they are Qualified to opperate at 260°C cyclical temperature and compatible with an extended range of aerospace fluids.

Other design features include metal-to-metal grounding between plug and receptacal, passivated stainless steel shell material, and contacts of plated gold over nickel.

Unplated Type K thermocouple contacts are also available as Qualified Product.

ESC 10 YE

QUALIFIED PRODUCT

SEALTRON™ / AMETEK ENGINEERED INTERCONNECT AND PACKAGING

GENERAL SPECIFICATIONS	
Temperature	
Class Y	-65°C to +200°C
Class YE	-65°C to +260°C cyclical
Amperage	
#20 Contact	5.5 A
#16 Contact	11 A
#12 Contact	20 A
Fluid Immersion	
Synthetic Lube Oil	Per MIL-L-23699
Hydraulic Fluid	Per MIL-H-5606
Ethylene Glycol	Per MIL-A-8243
1,1,1, Trichloroethane	Kerosene MIL-T-5624
Skydrol LD4	
Freon TF	Per MIL-C-81302
Bromocloromethane	MIL-B-4394
White Spirit BS 245	(Stoddard Solvent)
Genklene BS 4487	
Air Leakage (Hermeticity)	Leakage rate less than 0.01 microns per cubic foot per hour (1×10^{-7} cc/sec) of Helium at 15 psi.

INSERT RETENTION		
Shell Size	Test Pressure	
	kPa	lbf/in^2
8 to 12	1035	150
14 to 18	690	100
20 to 22	517	75
24 to 28	414	60

DIELECTRIC WITHSTANDING VOLTAGE		
Altitude	Test Voltage	Duration
Sea Level	1500V rms 45-65 Hz	60 secs
70,000 ft.	1375v rms 45-65 Hz	60 secs

Thermal Shock:

No evidence of damage detrimental to the operation of connector after testing at less than 4°C (39°F) to greater than 90°C (204°F).

ESC 10 YE

QUALIFIED PRODUCT

ESC Part Numbering System

Connector types will be identified in the following manner:

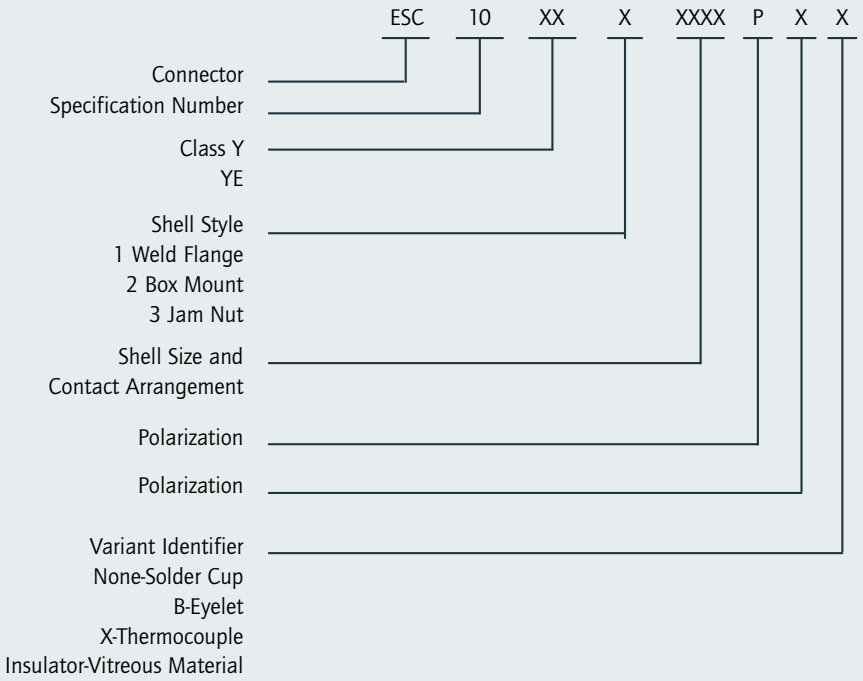

ESC 10 YE

QUALIFIED PRODUCT

SEALTRON™ / AMETEK ENGINEERED INTERCONNECT AND PACKAGING

Insert Arrangements

Other arrangments as shown in MILStd-1554 available by special order.
Contact factory for availability

8 10	8-3 3 #20	8-98 3 #20	10-5 5 #20	10-6 6 #20	
12 14	12-3 3 #16	12-12 12 #20	14-4 4 #12	14-7 7 #16	14-15 15 #20
16 18	16-10 10 #16	16-24 24 #20	18-8 8 #12	18-14 14 #16	18-31 31 #20
20	20-25 19 #20 6 #12	20-28 24 #20 4 #12	20-39 37 #20 2 #16	20-41 41 #20	
22	22-12 12 #12	22-19 19 #16	22-32 26 #20 6 #2	22-39 27 #20 12 #16	22-55 55 #20
24 28	24-30 30 #16	24-43 23 #20 20 #16	24-57 55 #20 2 #2	24-61 61 #20	28-42 42 #16

ESC 10 YE

QUALIFIED PRODUCT

SEALTRON™ / AMETEK ENGINEERED INTERCONNECT AND PACKAGING

ESC 10 Y(E)1

Shell Size	ØA				ØB				ØF		G Thread
	MAX		MIN		MAX		MIN		MAX		BS 1580
	mm	Inch	mm	Inch	mm	Inch	mm	Inch	mm	Inch	Class 2A
08	18,36	0.723	17,86	0.703	12,70	0.500	12,55	0.494	14,27	0.562	0.5625-24 UNEF
10	21,59	0.850	21,08	0.830	14,27	0.562	14,12	0.556	17,68	0.696	0.6875-24 UNEF
12	26,80	1.055	26,29	1.035	19,05	0.750	18,90	0.744	22,23	0.875	0.875 -20 UNEF
14	27,94	1.100	27,43	1.080	20,62	0.812	20,47	0.806	23,77	0.936	0.9375-20 UNEF
16	30,99	1.220	30,48	1.200	23,80	0.937	23,65	0.931	26,97	1.062	1.0625-18 UNEF
18	34,29	1.350	33,78	1.330	26,97	1.062	26,82	1.056	30,15	1.187	1.1875-18 UNEF
20	37,34	1.470	36,83	1.450	30,15	1.187	30,00	1.181	33,32	1.312	1.3125-18 UNEF
22	40,46	1.600	40,13	1.580	33,32	1.312	33,17	1.306	36,50	1.437	1.4375-18 UNEF
24	43,68	1.720	43,17	1.700	36,50	1.437	36,35	1.431	39,67	1.562	1.5625-18 UNEF
28	50,21	1.977	49,70	1.957	38,25	1.506	38,10	1.500	46,02	1.812	1.8125-18 UN

Contact Size	H			
	MAX		MIN	
	mm	Inch	mm	Inch
20	4,93	0.194	3,40	0.134
16 & 12	5,69	0.224	4,17	0.164

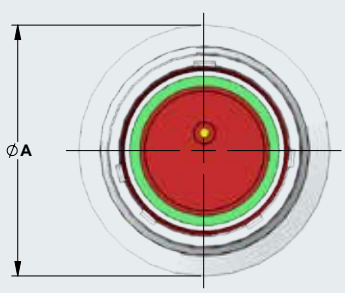

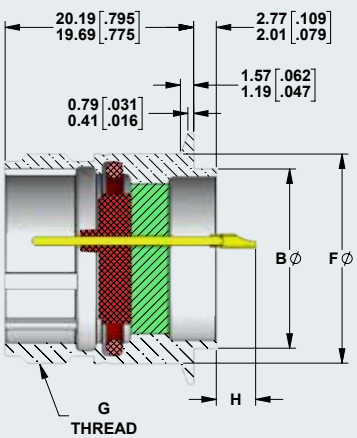

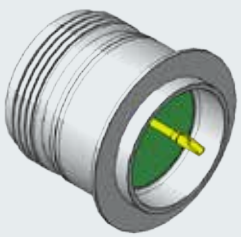

ESC 10 YE

QUALIFIED PRODUCT

SEALTRON™ / AMETEK ENGINEERED INTERCONNECT AND PACKAGING

ESC 10 Y(E)2

Shell Size	A		B				C		ØK MAX		L Thread BS 1580	ØG			
	MAX		MAX		MIN							MAX		Min	
	mm	Inch	mm	Inch	mm	Inch	mm	Inch	mm	Inch	Class 2A	mm	Inch	mm	Inch
08	15,09	0.594	20,75	0.817	20,49	0.807			14,27	0.562	0.5625-24 UNEF	12,70	0.500	12,55	0.494
10	18,26	0.719	23,93	0.942	23,67	0.932			17,68	0.696	0.6875-24 UNEF	14,27	0.562	14,12	0.556
12	20,62	0.812	26,32	1.036	26,06	1.026			22,22	0.875	0.875 -20 UNEF	19,05	0.750	18,90	0.744
14	23,01	0.906	28,71	1.130	28,45	1.026	3,05	0.120	23,77	0.936	0.9375-20 UNEF	20,62	0.812	20,47	0.806
16	24,61	0.969	31,88	1.255	31,62	1.245			26,97	1.061	1.0625-18 UNEF	23,80	0.937	23,65	0.931
18	26,97	1.062	50,93	1.348	33,98	1.338			30,15	1.187	1.1875-18 UNEF	26,97	1.062	26,82	1.056
20	29,36	1.156	36,63	1.442	36,37	1.432			33,32	1.312	1.3125-18 UNEF	30,15	1.187	30,00	1.181
22	31,75	1.250	39,80	1.567	39,54	1.557			36,50	1.437	1.4375-18 UNEF	33,32	1.312	33,17	1.306
24	34,92	1.375	43,39	1.708	43,13	1.698	3,81	0.150	39,67	1.562	1.5625-18 UNEF	36,50	1.437	36,35	1.431
28	39,67	1.562	34,24	2.005	50,69	1.995			46,02	1.812	1.8125-18 UN	38,25	1.506	38,10	1.500

Contact Size	E			
	MAX		MIN	
	mm	Inch	mm	Inch
20	4,93	0.194	3,40	0.134
16 & 12	5,69	0.224	4,17	0.164

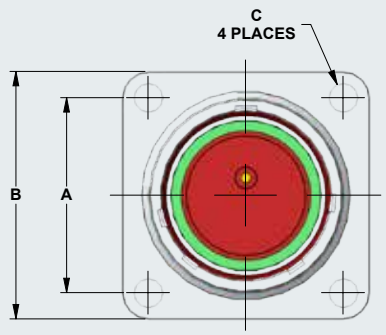

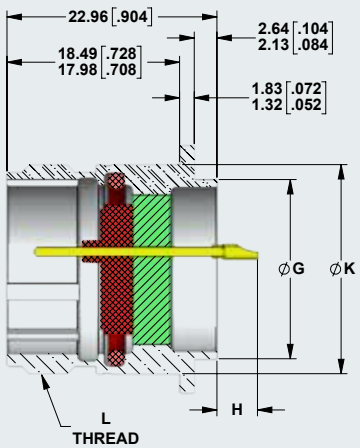

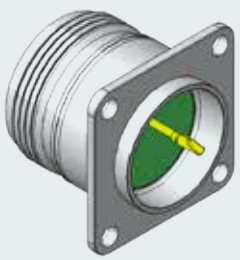

ESC 10 YE

QUALIFIED PRODUCT

SEALTRON™ / AMETEK ENGINEERED INTERCONNECT AND PACKAGING

ESC 10 Y(E) 3

Shell Size	A				ØC				E				F Thread BS 1580	G Thread BS 1580	ØK MAX	
	MAX		MIN		MAX		MIN		MAX		MIN					
	mm	Inch	mm	Inch	mm	Inch	mm	Inch	mm	Inch	mm	Inch	Class 2A	Class 2A	mm	Inch
08	24,89	0.980	24,10	0.949	27,38	1.078	26,59	1.047					0.625 -20 UN	0.5625-24 UNEF	14,27	0.562
10	28,04	1.104	27,25	1.073	30,28	1.192	29,51	1.162					0.750 -20 UNEF	0.6875-24 UNEF	17,68	0.696
12	32,79	1.291	32,00	1.260	35,05	1.380	34,26	1.349					0.9375-20 UNEF	0.875 -20 UNEF	22,23	0.875
14	35,33	1.391	34,54	1.360	38,51	1.516	37,72	1.485	3,48	0.137	2,46	0.097	1.000 -20 UNEF	0.9375-20 UNEF	23,77	0.936
16	38,51	1.516	37,72	1.485	41,68	1.641	40,89	1.610					1.125 -18 UNEF	1.0625-18 UNEF	26,97	1.062
18	41,68	1.641	40,89	1.610	44,86	1.766	44,07	1.735					1.250 -18 UNEF	1.1875-18 UNEF	30,15	1.187
20	44,86	1.766	44,07	1.735	49,63	1.954	48,84	1.923					1.375 -18 UNEF	1.3125-18 UNEF	33,32	1.312
22	49,63	1.954	48,84	1.923	52,78	2.078	51,99	2.047					1.500 -18 UNEF	1.4375-18 UNEF	36,50	1.437
24	52,81	2.079	52,05	2.048	55,42	2.182	54,66	2.152	3,76	0.148	3,25	0.128	1.625 -18 UNEF	1.5625-18 UNEF	39,67	1.562
28	59,21	2.331	58,42	2.300	61,82	2.434	61,04	2.403					1.875 -16 UN	1.8125-18 UN	46,02	1.812

Shell size	Contact size 20				Contact size 16 & 12			
	mm	Inch	mm	Inch	mm	Inch	mm	Inch
8 to 20	4,57	1.80	3,05	0.120	5,33	0210	3,81	0.150
22 to 28	4,29	0.169	2,77	0.109	5,05	0.199	3,53	0.139

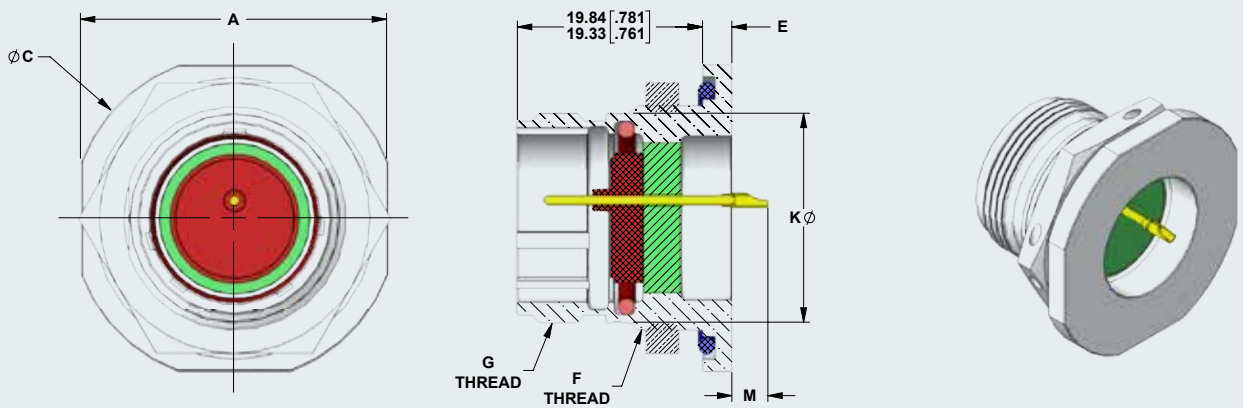

ESC 10 YE

QUALIFIED PRODUCT

Master Keyway Positions

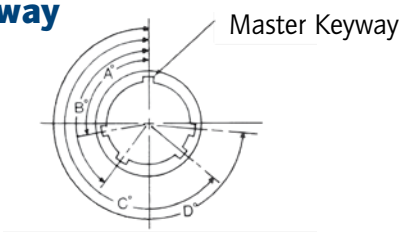

Position	Size 08				Size 10				Size 12 Thru 28			
	A°	B°	C°	D°	A°	B°	C°	D°	A°	B°	C°	D°
Normal	105	140	215	265	105	140	215	265	105	140	215	265
6	102	132	248	320	102	132	248	320	18	149	192	259
7	80	118	230	312	80	118	230	312	92	152	222	342
8	35	140	205	275	35	140	205	275	84	152	204	334
9	64	155	234	304	64	155	234	304	24	135	199	240
Y	N/A	N/A	N/A	N/A	25	115	220	270	98	152	268	338

SEALTRON™ / AMETEK® ENGINEERED INTERCONNECT AND PACKAGING

E: sealtron.info@ametek.com | **T:** +1 513 733 8400

www.sealtron.com

Scan for more information