MIL-C-26500



Sealtron's 8500/8600 series of hermetically sealed connectors meet or exceed the requirements of MIL-C-26500. The 8521/8602 series are dimensionally equivalent to MS27034 and MS24265 respectively. The 8503/8603 has the same mounting dimensions as MS24264.

MIL-C-26500 does not specify the shell material, nor does it specify the plating for the shell and contacts for hermetic class connectors. Sealtron offers as standard connectors, cold rolled steel shell plated fused tin, 300 Series passivated stainless steel shell, or300 Series stainless steel shell plated fused tin . Either eyelet or solder pot contacts with fused tin plating are offered as standard. Other contact styles and plating combinations are available for your specific needs.

HOW-TO-ORDER

EXAMPLE **MS 27034 H 18 T 31 E N**

- MS Shell Part Number
- Class
- Shell Size
- Coupling Type
- Contact Arrangement
- Style
  - E- eyelet
  - C- solder cup
- KEYWAY POSITION

EXAMPLE **8602 14 B 7P9 FP M134**

8602 Shell design
14 Shell Size
B Bayonet Coupling
7P Pin Arrangement
9 Alternate key Position
FP Pin Design

Pin Design
FP Flattened & Pierced
SP Solder Pot
PT Pig Tail

M134 STD. Finish: Shell fused tin over nickel. Contacts Gold Over Nickel.
M136 STD. Finish passivated C.R.E.S. Shell. Contacts Gold Over Nickel

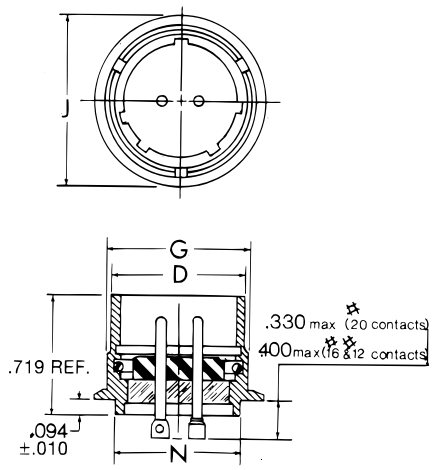

8602 SERIES

MS27034
STYLE B

Shell Size	CD + .000 - .005	G MAX.	J ± .020	N max.
10	.659	.696	.840	.562
12	.829	.875	1.045	.750
14	.898	.935	1.090	.812
16	1.025	1.062	1.210	.937
18	1.131	1.187	1.340	1.062
22	1.381	1.437	1.590	1.312

8603 SERIES

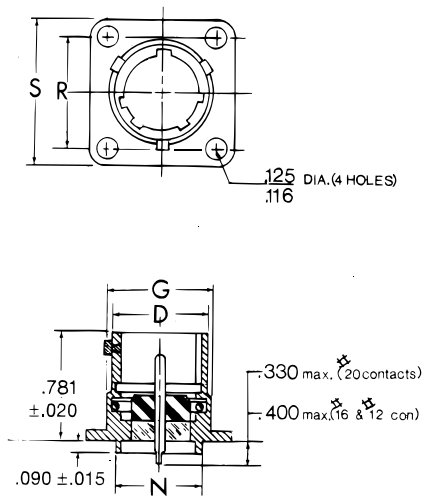

Shell Size	D + .000 - .005	G MAX.	N max.	R ± .005	S ± .005
10	.659	.696	.562	.719	.937
12	.829	.875	.750	.812	1.031
14	.898	.935	.812	.906	1.125
16	1.025	1.062	.937	.969	1.250
18	1.131	1.187	1.062	1.062	1.343
22	1.381	1.437	1.312	1.250	1.562

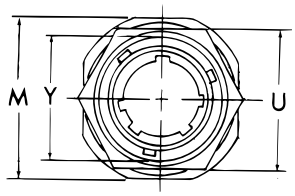

8605 SERIES

MS24265
STYLE B

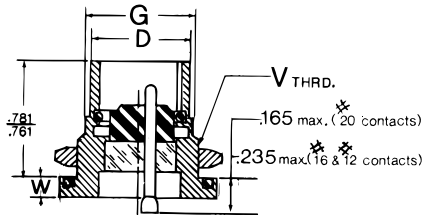

Shell Size	V Thread Class 2A	G MAX.	U max.	D + .000 - .005	M ± .005	W ± .020	Y ± .003
10	.750-20 UNEF	.696	.953	.659	1.104	.117	.718
12	.938-20 UNEF	.875	1.140	.829	1.291		.905
41	1.000-20 UNEF	.935	1.250	.898	1.391		.968
16	1.125-20 UNEF	1.062	1.329	1.025	1.516		1.093
18	1.250-20 UNEF	1.187	1.455	1.131	1.641	▼	1.217
22	1.500-20 UNEF	1.437	1.705	1.381	1.954	.148	1.467

8502 SERIES

MS27034
STYLE T

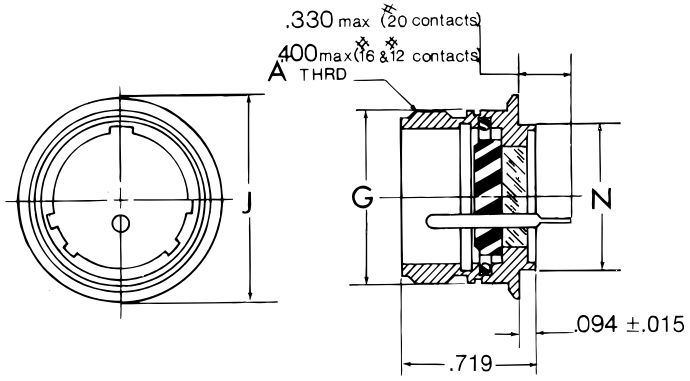

Shell Size	A Thread Class 2A	G MAX.	J ± .020	N max.
10	.688-24 NEF	.696	.840	.562
12	.875-20 UNEF	.875	1.045	.750
14	.938-20 UNEF	.935	1.090	.812
16	1.063-18UNEF	1.062	1.210	.937
18	1.188-18UNEF	1.187	1.340	1.062
22	1.438-18UNEF	1.437	1.590	1.312

8503 SERIES

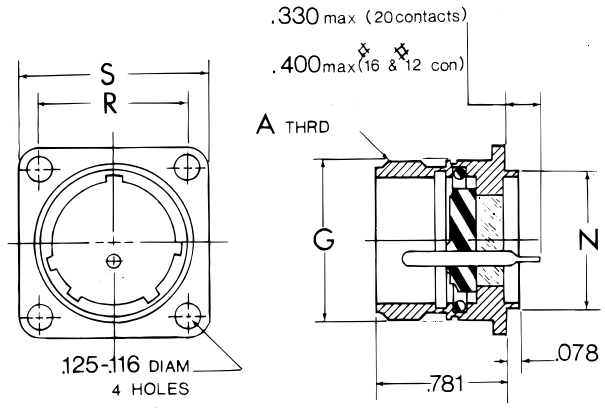

Shell Size	A Thread Class 2A	G MAX.	N max.	R ± .005	S ± .005
10	.688-24 NEF	.696	.562	.719	.937
12	.875-20 UNEF	.875	.750	.812	1.031
14	.938-20 UNEF	.935	.812	.906	1.125
16	1.063-18UNEF	1.062	.937	.969	1.250
18	1.188-18UNEF	1.187	1.062	1.062	1.343
22	1.438-18UNEF	1.437	1.312	1.250	1.562

8505 SERIES

MS24265
STYLE T

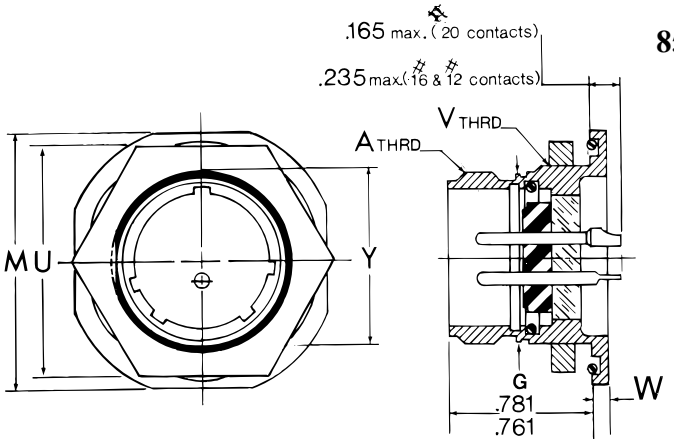

Shell Size	A Thread Class 2A	G MAX.	M ± .005	U max.	V Thread Class 2A	W ± .020	Y ± .003
10	.688-24 NEF	.696	1.104	.953	.750-20 UNEF	.117	.718
12	.875-20 UNEF	.875	1.219	1.140	.938-20 UNEF		.905
14	.938-20 UNEF	.935	1.391	1.250	1.000-20 UNEF		.968
16	1.063-18UNEF	1.062	1.516	1.329	1.125-20 UNEF		1.093
18	1.188-18UNEF	1.187	1.641	1.455	1.250-20 UNEF	▼	1.217
22	1.438-18UNEF	1.437	1.954	1.705	1.500-20 UNEF	.148	1.467

Insert Arrangement MIL-STD 1554

(Engaging face of pin insert Shown)

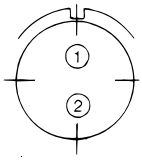

10-2
2 #20

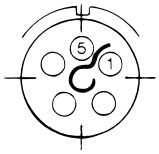

10-5
5 #20

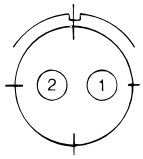

10-20
2 #16

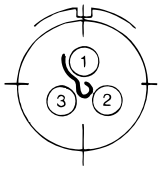

12-3
3 #16

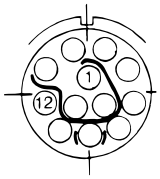

12-12
12 #20

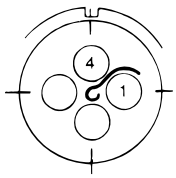

14-4
4 #12

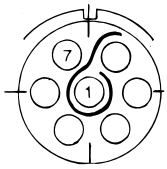

14-7
7 #6

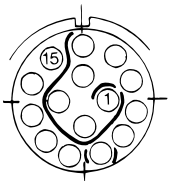

14-15
15 #20

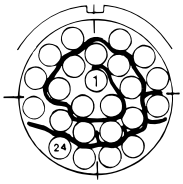

16-24
24 #20

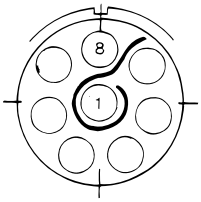

18-8
8 #12

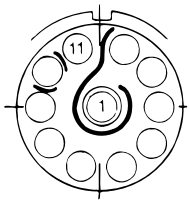

18-11
10 #6
1 Coaxial

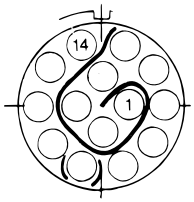

18-14
14 #16

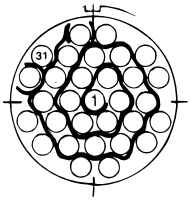

18-31
31 #20

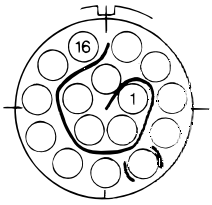

20-16
16 #16

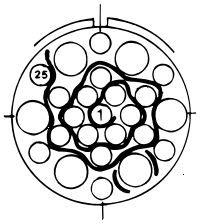

20-25
19 #20
6 #12

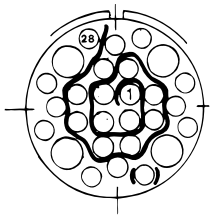

20-28
24 #20
4 #12

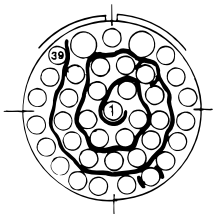

20-39
37 #20
2 #16

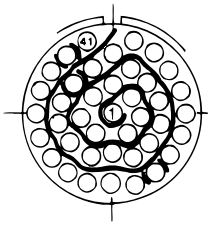

20-41
41 #20

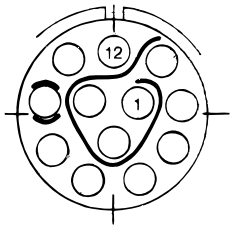

22-12
12 #12

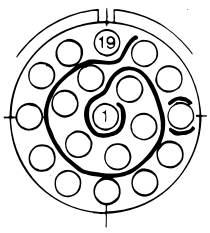

22-19
19 #16

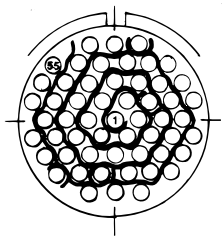

22-55
55 #20

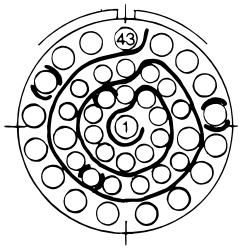

24-43
23 #20
20 #16

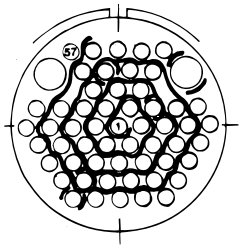

24-57
55 #20
2 #12

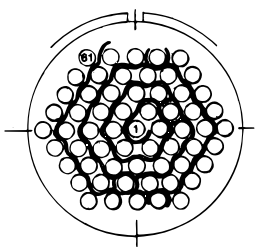

24-61
61 #20

Consult the factory for additional insert arrangements

SEALTRON
E: sealtron.info@ametek.com | **T:** +1 513 733 8400
www.sealtron.com