MIL-DTL-83723 (SERIES III)



Sealtron's 6500/6600 series connectors meet or exceed the requirements of MIL-DTL-83723 and the applicable slash sheets. MIL-DTL-83723 series III is an upgrading of the MIL-C-26500 connectors and better defining the materials, specified contacts and plating for the hermetic class connector. The M83723 and MIL-DTL-26500 connectors have the same mounting dimensions and are intermateable.

Improvements made in the design specifications are gold plated solder or flex-tape contacts and shell materials of tin plated ferrous alloy for soldering or passivated stainless steel for welding procedures. Other plating combinations and contact designs are available upon request. The interfacial seals have raised barriers around each contact (cork-and-bottle design). These raised barriers compress into the depressions on the face of the female insert and provide a superior moisture barrier.

HOW-TO-ORDER

M 83723 /90 Y 16 10 N

- M 83723 — Basic MIL Number
- /90 — Slash sheet(Shell Style)
- Y — Class
  - H=Hermetic-Tin plate ferrous alloy shell
  - Y = Hermetic-Passivated stainless steel
  - N = Hermetic-Stainless steel shell plated electro deposited nickel
  - Contacts are gold plated
- 16 — Shell Size
- 10 — Insert Arrangement
- N — Keyway Position

6502 -16 - 10PN - SP - M134

- Shell Style
- Shell Size
- Insert Arrangment
- Keyway Position
- Contact Style
- Plating Designator

class H= M134
class Y = M136
class N = M146

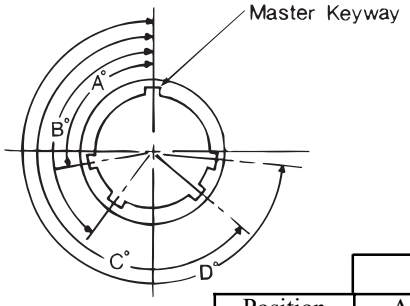

Keyway Locations

	SIZE 8				SIZE 10				SIZE 12 thru 24			
Position	A°	B°	C°	D°	A°	B°	C°	D°	A°	B°	C°	D°
Normal	105	140	215	265	105	140	215	265	105	140	215	265
6	102	132	248	320	102	132	248	320	18	149	192	259
7	80	118	230	312	80	118	230	312	92	152	222	342
8	35	140	205	275	35	140	205	275	84	152	204	334
9	64	155	234	304	64	155	234	304	24	135	199	240
Y	—	—	—	—	25	115	220	270	98	152	268	338

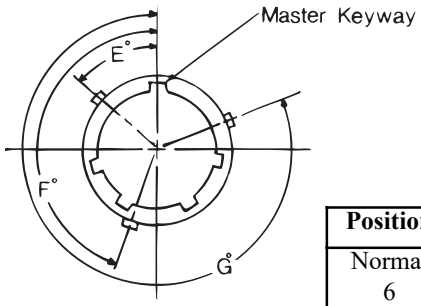

Bayonet Locations

	SIZE 8			SIZE 10			SIZE 12 thru 24		
Position	**E°**	**F°**	**G°**	**E°**	**F°**	**G°**	**E°**	**F°**	**G°**
Normal	60	180	300	60	180	300	50	**170**	290
6	46	166	286	46	166	286	↓	↓	↓
7	46	166	286	46	166	286			
8	60	180	300	60	180	300			
9	89	209	329	89	209	329			
Y	—	—	—	60	180	300			

INSERT ARRANGEMENTS

(Engaging Face of Pin Insert Shown)

MIL- STD-1554

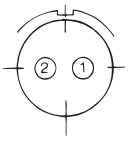

8-2
2 #20

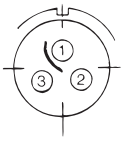

8-3
3 #20

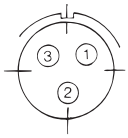

8-98
3 #20

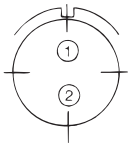

10-2
2 #20

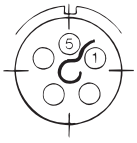

10-5
5 #20

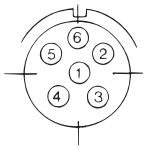

10-6
6 #20

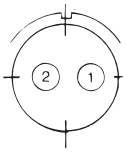

10-20
2 #16

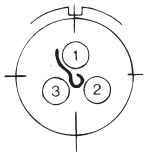

12-3
3 #16

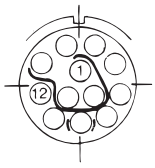

12-12
12 #20

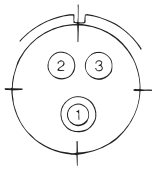

14-3
2 #16
1 SHIELDED

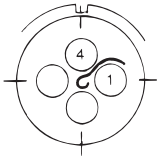

14-4
4 #12

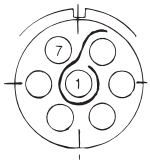

14-7
7 #16

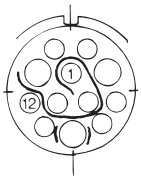

14-12
9 #20
3 #16

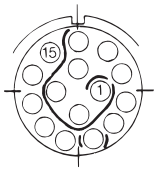

14-15
15 #20

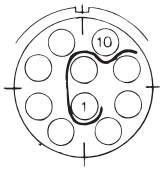

16-10
10 #16

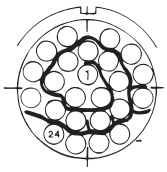

16-24
24 #20

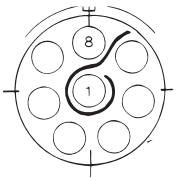

18-8
8 #12

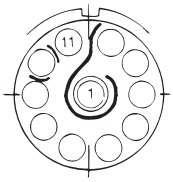

18-11
10 #16
1 SHIELDED

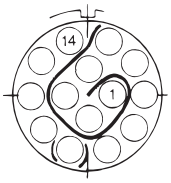

18-14
14 #16

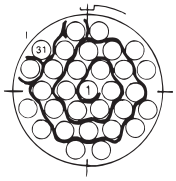

18-31
31 #20

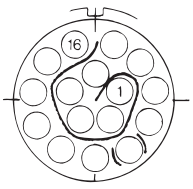

20-16
16 #16

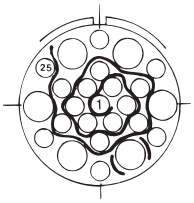

20-25
19 #20
6 #12

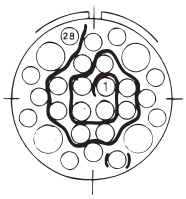

20-28
24 #20
4 #12

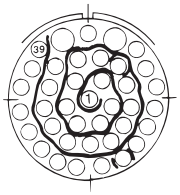

20-39
37 #20
2 #16

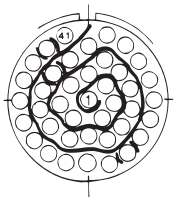

20-41
41 #20

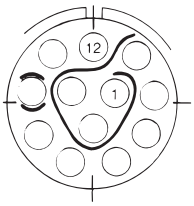

22-12
12 #12

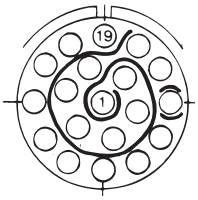

22-19
19 #16

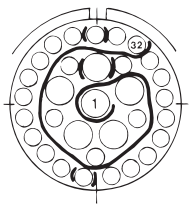

22-32
26 #20
6 #12

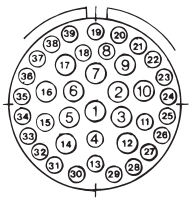

22-39
27 #20
12 #16

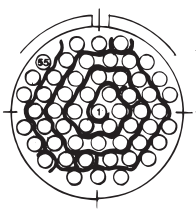

22-55
55 #20

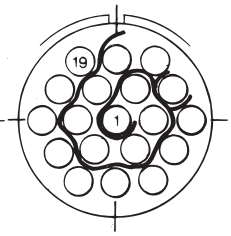

24-19
19 #12

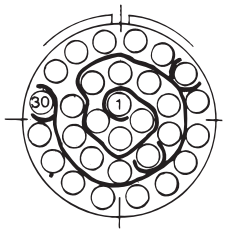

24-30
30 #16

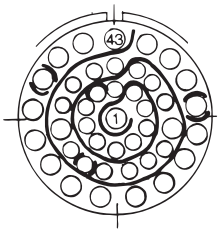

24-43
23 #20
20 #16

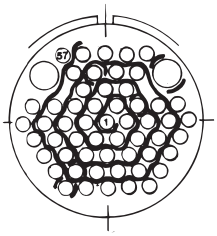

24-57
55 #20
2 #12

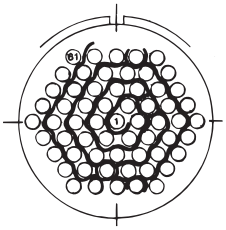

24-61
61 #20

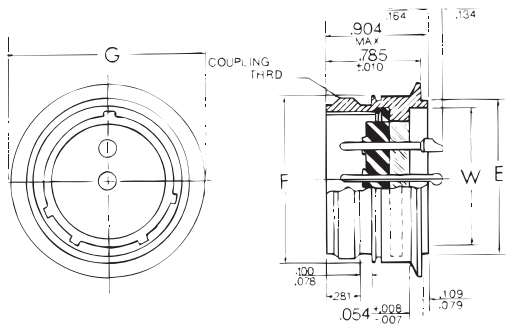

6502 Series M83723/90

Shell Size	Coupling Thread UNEF-2A	E ± .003	F max.	G ± .010	W min.
8	.563-24	.497	.562	.713	.400
10	.688-24	.559	.696	.840	.411
12	.875-20	.747	.875	1.045	.581
14	.938-20	.809	.936	1.090	.650
16	1.063-18	.934	1.062	1.210	.765
18	1.188-18	1.059	1.187	1.340	.864
22	1.438-18	1.309	1.437	1.590	1.133

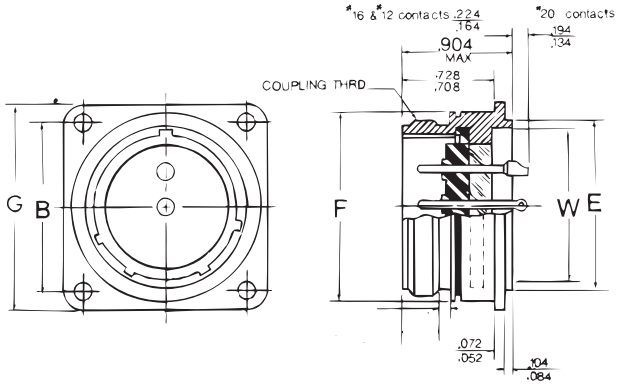

6503 Series M83723/88

Shell Size	B	Coupling Thread UNEF-2A	E ±.003	F max.	G ±.005	W min.
8	.594	.563-24	.497	.562	.812	.400
10	.719	.688-24	.559	.696	.937	.411
12	.812	.875-20	.747	.875	1.031	.581
14	.906	.938-20	.809	.936	1.125	.650
16	.969	1.063-18	.934	1.062	1.250	.777
18	1.062	1.188-18	1.059	1.187	1.343	.864
20	1.156	1.313-18	1.184	1.312	1.437	1.034
22	1.250	1.438-18	1.309	1.437	1.562	1.133
24	1.395	1.563-18	1.434	1.562	1.703	1.284

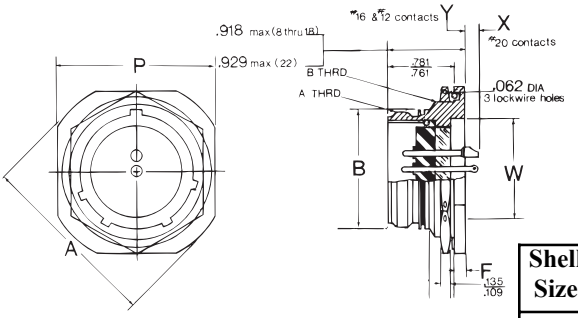

6505 Series M83723/89

Shell Size	A Thread UNEF-2A	B Thread UNEF-2A	A ±.015	B ±.002	F ±.020	P ±.015	W min.	X ±.030	Y ±.030
8	.563-24	.625-20	1.062	.558	.117	.965	.400	.150	.180
10	.688-24	.750-20	1.177	.692	↓	1.089	.411	↓	↓
12	.875-20	.938-20	1.368	.871	↓	1.276	.581	↓	↓
14	.938-20	1.000-20	1.500	.931	↓	1.376	.650	↓	↓
16	1.063-18	1.125-18	1.625	1.055	↓	1.501	.777	↓	↓
18	1.188-18	1.250-18	1.750	1.183	↓	1.626	.864	↓	↓
22	1.438-18	1.500-18	2.062	1.433	.128/.148	1.939	1.133	.139	.169

6602 Series M83723/80

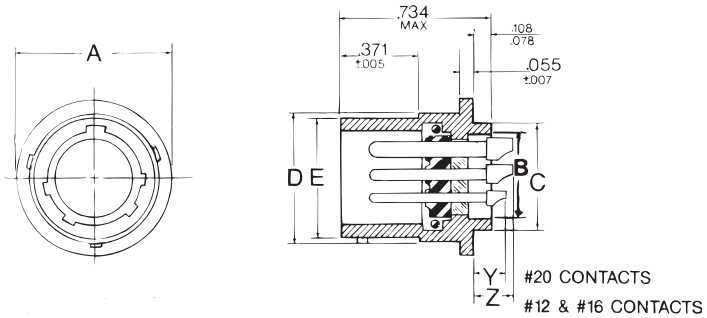

Shell Size	A ±.020	B min.	C max.	D max.	E +.005 -.000	Y max.	Z max.
8	.740	.406	.500	.561	.531	.330 max.	.400
10	.840	.443	.562	.696	.654		
12	1.045	.668	.750	.875	.824		
14	1.090	.668	.812	.935	.893		
16	1.210	.763	.937	1.062	1.020		
18	1.340	.862	1.062	1.187	1.126		
20	1.430	1.108	1.187	1.312	1.251		
22	1.590	1.204	1.312	1.437	1.376		
24	1.710	1.388	1.437	1.562	1.501	▼	▼

6612 Series M83723/93

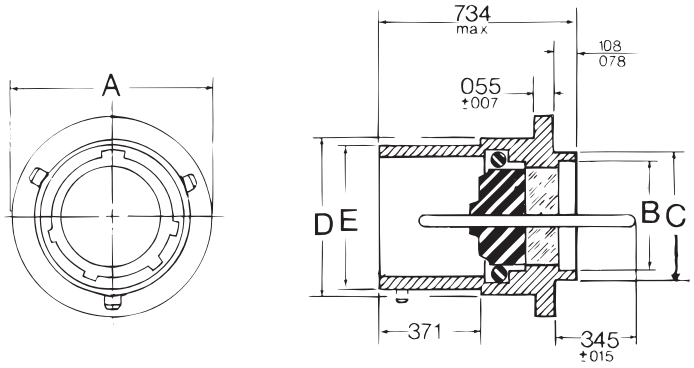

Shell Size	A ±.020	B min.	C max.	D max.	E +.005 -.000
8	.740	.406	.500	.561	.531
10	.840	.443	.562	.696	.654
12	1.045	.668	.750	.875	.824
14	1.090	.668	.812	.935	.893
16	1.210	.763	.937	1.062	1.020
18	1.340	.862	1.062	1.187	1.126
20	1.430	1.108	1.187	1.312	1.251
22	1.590	1.204	1.312	1.437	1.376
24	1.710	1.388	1.437	1.562	1.501

6603 Series M83723/79

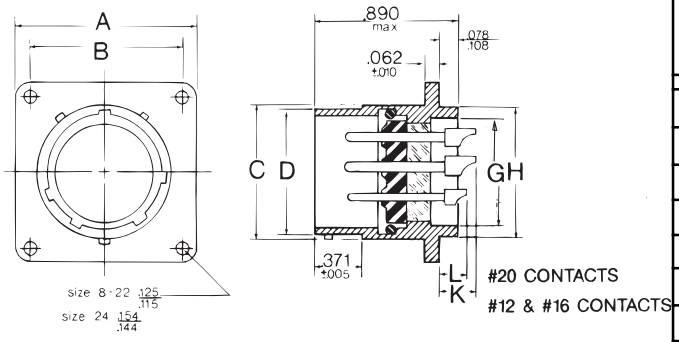

Shell Size	A ±.005	B ± .005	C max.	D + .005 - .000	G min.	H max.	K max.	L max.
8	.812	.594	.561	.531	.406	.500	.400	.330
10	.937	.719	.696	.654	.443	.562		
12	1.031	.812	.875	.824	.668	.750		
14	1.125	.906	.935	.893	.668	.812		
16	1.250	.969	1.062	1.020	.763	.937		
18	1.343	1.062	1.187	1.126	.862	1.062		
20	1.437	1.156	1.312	1.251	1.108	1.187		
22	1.562	1.250	1.437	1.376	1.204	1.312		
24	1.703	1.375	1.562	1.501	1.388	1.437	▼	▼

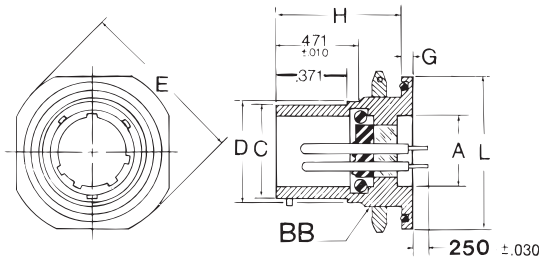

6615 Series M83723/94

Contacts designed for flex-tape applications.

Shell Size	BB Thrd.Size UNEF-2A	A min.	C +.005 -.000	D max.	E max.	G ±.020	H ±.010	L ±.005
8	.625-20	.493	.531	.561	1.068	.117	.771	.979
10	.750-20	.555	.654	.696	1.192			1.104
12	.938-20	.743	.824	.875	1.380			1.291
14	1.000-20	.805	.893	.935	1.505			1.391
16	1.125-20	.931	1.020	1.062	1.630			1.516
18	1.250-18	1.055	1.126	1.187	1.756			1.641
20	1.375-18	1.243	1.251	1.312	1.860			1.766
22	1.500-18	1.305	1.376	1.437	2.068	.148		1.954
24	1.625-18	1.493	1.501	1.562	2.160	.148		2.079

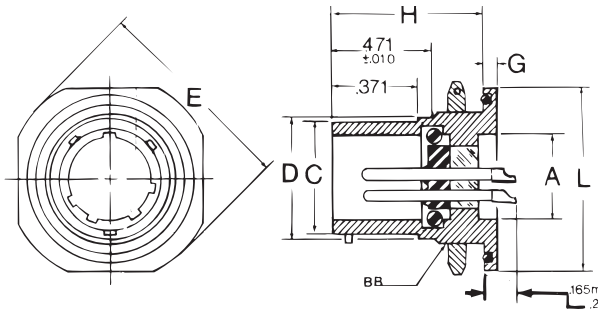

#20 CONTACTS
#12 & #16 CONTACTS

6605 Series M83723/81

Shell Size	BB Thrd.Size UNEF-2A	A min.	C +.005 -.000	D max.	E max.	G ±.020	H ±.010	L ±.005
8	.625-20	.493	.531	.561	1.068	.117	.771	.979
10	.750-20	.555	.654	.696	1.192			1.104
12	.938-20	.743	.824	.875	1.380			1.291
14	1.000-20	.805	.893	.935	1.505			1.391
16	1.125-20	.931	1.020	1.062	1.630			1.516
18	1.250-18	1.055	1.126	1.187	1.756			1.641
20	1.375-18	1.243	1.251	1.312	1.860			1.766
22	1.500-18	1.305	1.376	1.437	2.068	.148		1.954
24	1.625-18	1.493	1.501	1.562	2.160	.148		2.079

SEALTRON
E: sealtron.info@ametek.com | **T:** +1 513 733 8400
www.sealtron.com