Chatillon
force measurement
AMETEK

DFE3 Series

Digital Force Gauge



Functions and Features



The DFE3 Series offers the best price performance of any digital force gauge available today. This compact, easy-to-use force gauge is designed for basic and complex applications. Ideal for handheld or test stand applications.

Measurement accuracy is better than 0.2% full scale in integral load cell models. A large, easy-to-read, high resolution, full color LCD display supports a variety of standard gauge functions including normal and peak readings, high/low limits, setpoints, pass/fail results, statistical results, load averaging, load-cell actuation and direction. Loads are displayed in ozf, gf, lbf, kgf and N units. The display can be inverted and displayed results may be "hidden" from the operator. The DFE3 also offers password protection for gauge set ups and includes a NIST Calibration Certificate.

Comprehensive Results

The DFE3 Series supplies you with comprehensive results that are easy to view and understand. The gauge displays:

- Measured Result with Units:
  - Peak Tension and Compression.
  - Load Average/Time.
- Operating Mode.
- Pass-Fail Result.
- High and Low Load Results.
- Saved Results.
- Statistical Calculations:
  - Average with MIN and MAX Results.
  - Cv with Average and Standard Deviation.
  - Standard Deviation.
  - Graphical representation of saved results.

Outputs

The DFE3 Series comes standard with a USB-C connection. The USB interface allows communications with a PC.

Calibrate and Verify Status

The DFE3 Series incorporates flash memory. You have immediate access to battery conditions, including estimated battery life remaining. You can also view loadcell status, including the number of overloads that have been applied to the gauge.

Time Method

The Time method allows you to establish your load averaging based on a load threshold and time duration. The load threshold determines the start of the averaging, while the time duration defines the length of the test period. The gauge will begin taking readings when the threshold is reached and will continue to take and average readings until the time duration has expired.

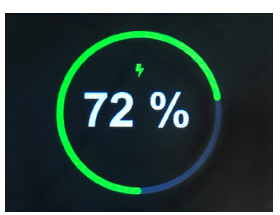

Battery Life

The extraordinarily long battery life of the DFE3 reduces the need for continuous recharging. The dimming functionality of the DFE3 provides a battery life of 30 hours when the dimming is off while turning the dimming on will provide a full 40 hours of battery life.



The comfortable ergonomic design makes the DFE3 a pleasure to use.

AMETEK
SENSORS, TEST & CALIBRATION

Functions and Features

Unique User Interface

Easy to use, single layer user interface. No deep menu structure! Operate and set-up the DFE3 to perform your tasks. Fast and intuitive!

The high resolution display features brightness adjustments and can be inverted when required. The display can even be "hidden" at the press of a button. A load bar graph indicating load direction, measured load, and safe load helps prevent overloads: the load bar changes from green to red to indicate proximity to load cell capacity. The integral loadcells feature mechanical overload protection at 150% Full Scale.

Dependable Measurements

The DFE3 Series features an integral loadcell sensor that delivers repeatable, accurate results. The innovative load bargraph shows dynamic load, direction of load and warns you of pending overload conditions. Smart technology in the gauge even keeps track of overload history to aide in maintenance and troubleshooting.



Color Display

A large, easy-to-read full color LCD can display readings, icons, and visually indicate gauge or test status using various colors.

Function Keys

The rubber keypad features dedicated and dynamic function keys. The function keys correspond to displayed options and guide the user during operation.

Cursor Keys

Use the cursor keys for set-up, navigation, mode, and unit change.

Results and Statistics On Board



Live result screen with run number, pass/fail indicator, units, and display mode.



Saved results on the internal 32 GB SD card can be viewed and exported.

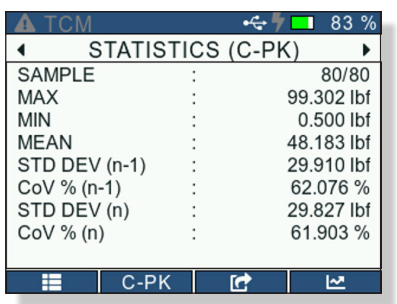

Statistics on saved results can be exported…



and a plot of saved results with Max and Min Average value can be displayed.

AMETEK
SENSORS, TEST & CALIBRATION

Automate with ForceTest

Chatillon force measurement
AMETEK

Expand Functionality

The ForceTest software expands the functionality of your Chatillon DFE3 force gauge. This easy-to-use Windows based software interfaces directly to your digital force gauge enabling you to automatically perform tests and graphs using a personal computer.

Test results can be followed directly on the screen while the test is running.

Intuitive User Interface

The colorful and intuitive user interface ensures that tests are simple to set up. Custom chart colors can be set for easy viewing.

Units of measure, fonts, titles and force measurement resolution can also be customized through the ForceTest software.

Easy Export and Reporting

Test results are presented in a preadsheet format allowing you to analyze and manipulate data and perform common mathematical and statistical calculations.

Results may be displayed graphically versus time. Tabular results are displayed and can be used to create relationships, queries or used to produce reports.

Test results can be exported to a .csv format. Graphs and test results can also be exported directly to PDF and Word formats.

Wide Variety of Options

Force at maximum in a time window, average force and much more can be captured using the ForceTest software.

Basic force measurement such as tensile and compression test formats, pull to limit, and compress to limit are performed by clicking just a few buttons.

Reduce Setup Time

To reduce setup time the ForceTest software offers pre-set templates. It also empowers its user to auto load the latest test performed, and to open previously saved tests for use as template for new tests.



AMETEK
SENSORS, TEST & CALIBRATION

Accessories

Chatillon force measurement
AMETEK

Supplied Ready-To-Go

Regardless of the configuration, your DFE3 is supplied ready-to-go. The gauge and accessories are supplied in a durable carrying case that is designed for all components including adapters and a USB charger. The units are powered by an internal, rechargeable Lithium-Ion battery. The compliment of adapters is comprehensive and includes a hook, compression tip, pointed tip, chisel tip, and a notch tip: everything you need to get started.

Accessories List (◆ Indicates an accessory included with the gauge.)

- Chisel Point, 110 lbf ..... ◆ **SPK-FMG-008A**
- Chisel Point, 550 lbf ..... ◆ **SPK-FMG-008B**
- Point Adapter, 110 lbf ..... ◆ **SPK-FMG-009A**
- Point Adapter, 550 lbf ..... ◆ **SPK-FMG-009B**
- Notch Adapter, 110 lbf ..... ◆ **SPK-FMG-010A**
- Notch Adapter, 550 lbf ..... ◆ **SPK-FMG-010B**
- Flat Adapter, 110 lbf ..... ◆ **SPK-FMG-011A**
- Flat Adapter, 550 lbf ..... ◆ **SPK-FMG-011B**
- Hook, 50 lbf ..... ◆ **SPK-FMG-012A**
- Hook, 110 lbf ..... ◆ **SPK-FMG-012B**
- Hook, 550 lbf ..... ◆ **SPK-FMG-012C**
- Extension Rod, 6" (152mm), #10-32 ..... **SPK-FMG-013A**
- Extension Rod, 6" (152mm), 5/16-18 ..... **SPK-FMG-013B**
- Carrying Case ..... ◆ **SPK-DF-118**

- Load Cell Shaft Protector **SPK-DFG3-001**
- #10-32 to 5/16-18 Adapter **P-10020**
- **Handle Assembly, DFE3/DFS3** **SPK-DF3-HANDLE**
  - Handle Assembly, DF3 Series **6873**
  - Grip Handle, MSC/FCE Rev. A **NC002825**
  - Screw, Flat Head Socket Cap Rev. – **E08-257**

- RS232 Cable, 10' (3m) **SPK-DF-RS232**
- Pistol Grip **SPK-FMG-141**
- Swivel Hook, 50 lbf **ML3867**
- Swivel Hook, 110 lbf **ML3850**
- Swivel Hook, 225 lbf **ML3869**
- Swivel Hook, 550 lbf **ML3868**
- Hook, Latch **NC002500**

- **5/8 Eye End Kit with Grip Pin for Gauges** **SPK-TCM-001**
  - Phan. 5/8 Eye End Kit with Grip Pin for Gauges **SPK-TCM-001/PHAN**
  - Shaft, Load Cell to 5/8 Eye End, 5/16-24M to 5/16-18M Rev A **NC003235**
  - Upper Eye End Adapter, 5/8" to 5/16-18F Rev A **NC003236**
  - Locking Ring Rev – **NC003140**
  - Locking Ring – Eye End, 5/16-18F Rev A **NC003237**
  - Use PIT/0169/00 Pin, Small Grip Rev 5 ..... **NC000612**
  - Adapter, 5/16-18M to 5/16-18F THRD. for Ã˜5/8 Upper Eye End, DFG3 ..... **NC003254**
  - Adapter, 5/16-18M to 10-32F THRD. for Ã˜5/8 Upper Eye End, DFG3 ..... **NC003255**

- **Kit, DF Metric Couplers #10-32_M6; 5/16-18_M6; M8_5/16-18** **SPK-TCM-033**
  - Coupling #10-32 Female to M6x1mm Female Rev – ... **NC002652**
  - Coupling 5/16-18 Female to M6x1mm Female Rev – .. **NC002658**
  - Adapter, Threaded, M8x1.25 to 5/16x18, DFG3 ..... **NC003256**

- **Battery Charger, Universal, with Cable** ..... ◆ **SPK-DF3-UNIV**
  - Cable, USB-C/USB-A, 3 FT, Black **6885**
  - Adapter, Wall Mount, AC/DC, 5V, 5W, USB-A **6886**
  - Kit, AC Adapter for P/N 6886 ..... **6887**

- Force Test DF2 & DF3 Software ..... **SPK-DF-FORCETEST**

Notes

Accessories are capacity dependent.

Accessories used with capacities below 110 lbf (500N) will generally have a #10-32 thread.

Accessories for higher capacities generally have a 5/16-18 thread.

Ordering

Models Accuracy: 0.2% FS

	lbf		N		kgf		ozf		gf	
Model	Full Scale	Resolution	Full Scale	Resolution	Full Scale	Resolution	Full Scale	Resolution	Full Scale	Resolution
DFE3-002	2.0000	0.0001	10.000	0.001	1.0000	0.0001	32.000	0.001	1000.0	0.1
DFE3-010	10.000	0.001	50.000	0.001	5.0000	0.0001	160.00	0.01	5000.0	0.1
DFE3-025	25.000	0.001	100.00	0.01	10.000	0.001	400.00	0.01	10000	1
DFE3-050	50.000	0.001	250.00	0.01	25.000	0.001	800.00	0.01	25000	1
DFE3-100	100.00	0.01	500.00	0.01	50.000	0.001	1600.0	0.1	50000	1
DFE3-200	200.00	0.01	1000.0	0.1	100.00	0.01				
DFE3-500	500.00	0.01	2500.0	0.1	250.00	0.01				



DFE3 Ports

A USB-C port is used to export results to LIMS or to the optional Chatillon ForceTest software.

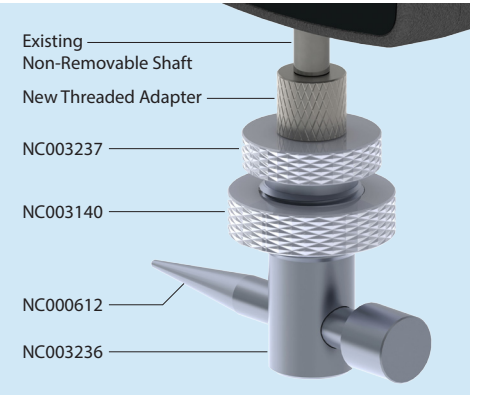

SPK-TCM-001

The redesigned grip and fixture connection kit offers more flexibility with a wide variety of fixtures.

Specifications and Dimensions

Specifications

Accuracy	**±0.2% of Full Scale**
Maximum Overload	**150% of Rated Capacity**
Resolution	**Up to 50,000 resolution points (according the Unit & Capacity)**
Peak Capture Rate	**10 kHz**
Data Sampling	**30 kHz**
Display Update Rate	**10 Hz**
Data Save (internal 32Go SD Card)	**Up to 100 Results**
Loadcell Thread End (10 to 100 lbf)	**#10-32**
Loadcell Thread End (200 & 500 lbf)	**5/16-18 UNC**
Power	**Battery (Lithium Ion) or via the USB-C port**
Battery Life	**With Dimming On: 40 Hours With Dimming Off: 30 Hours**
Operating Temperature	**40 to 110°F (5 to 45°C)**
Instrument Weight	**1.1 lbs (0.5 kg)**
Shipping Weight	**4 lbs (2 kg)**

Dimensions

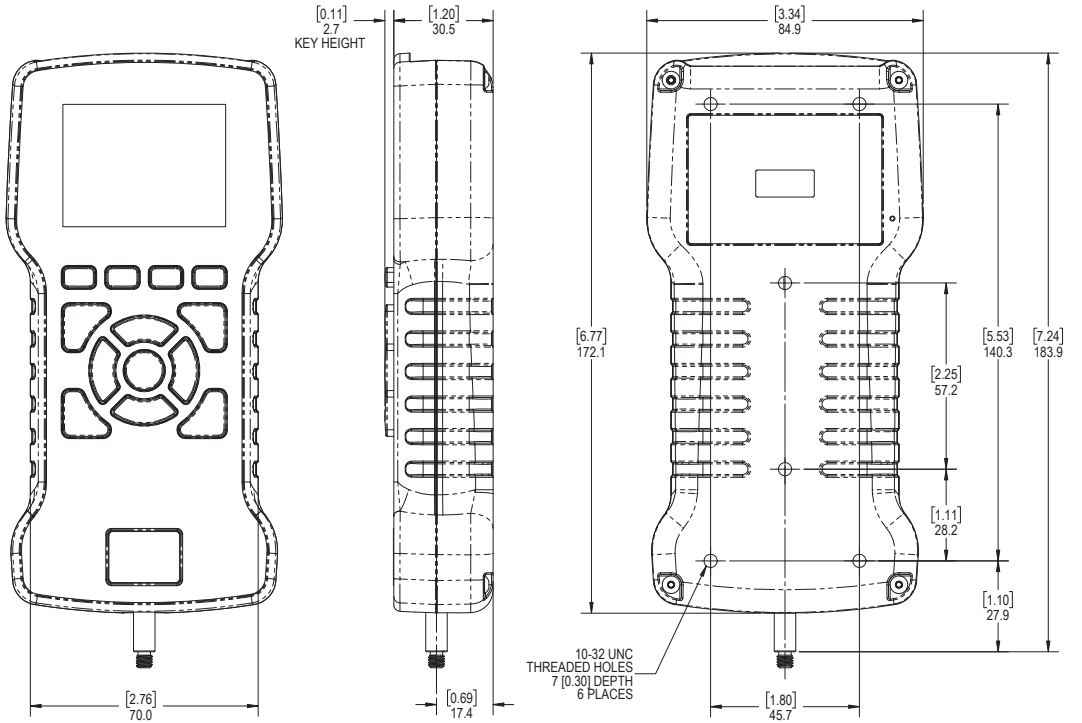

NIST Calibration Certificate - DFE3

The calibration of the **DFE3** is carried out with the utmost care by our metrology experts.
All our **DFE3s** are delivered with a NIST calibration certificate and a tensile and compression measurement reading.


Chatillon force measurement
AMETEK
CERTIFICATE OF CALIBRATION # WS6 5302
CUSTOMER:
ADDRESS:
CITY/STATE:
TRACEABILITY STATEMENT
MODEL: DFE3-500 SERIAL NUMBER: 216991
CALIBRATION PROCEDURE: MGPP-177 DATE CERTIFIED: 9/19/2022
PRODUCT SPECIFICATION
CAPACITY: 500 LBF X 0.01 LBF ACCURACY LIMITS: +/-0.20% OF FULL SCALE
CONDITION: New
PAGE 1 OF 2

AMETEK
SENSORS, TEST & CALIBRATION

USA, Florida
Tel +1 (800) 527 9999
test.sales@ametek.com

India
Tel +91 22 2836 4750
test.sales@ametek.com

Singapore
Tel +65 6484 2388
test.sales@ametek.com

China, Shanghai
Tel +86 21 5886 5111
test.sales@ametek.com

China, Beijing
Tel +86 21 8526 2111-19
test.sales@ametek.com

United Kingdom
Tel +44 (0) 1243 833 370
test.sales@ametek.com

France
Tel +33 (0) 30 68 89 40
general.lloyd-instruments@ametek.fr

Germany
Tel +49 (0) 2159 9136 510
info.mct-de@ametek.de

Denmark
Tel +45 4816 8000
test.sales@ametek.com

SS-DFE3 ISSUE 2111

For detailed specifications go to the Data Sheet at ametektest.com

Chatillon force measurement

No part of this document may be reproduced or modified in any form or by any means, electronic or mechanical, without express written permission from AMETEK STC.

©2021 AMETEK Incorporated

AMETEK SENSORS, TEST & CALIBRATION