LLOYD materials testing™
AMETEK®




# LSPlus Series

## 1 kN - 5kN Materials Testing

# 2 Precision in Performance:

In the world of material science and engineering, accurate and reliable testing is paramount to ensuring product safety, quality, and performance. The LSPlus Series universal testing machines from Lloyd Instruments are designed to excel in this crucial domain, offering a range of benefits that empower customers to conduct comprehensive material testing with ease.

## Unparalleled Precision and Accuracy

The LSPlus Series is engineered with precision in mind, employing high-accuracy interchangeable YLC Series load cells for tension, compression, and cycling through zero-force measurements. This ensures that every test result is meticulously precise, providing you with the confidence to make informed decisions based on reliable data.

## Versatility for a Diverse Range of Applications

The LSPlus Series caters to a wide array of material testing needs, with capacities ranging from 1 kN to 5 kN. This adaptability enables you to test a broad spectrum of materials, from delicate electronics components to robust construction materials, ensuring comprehensive evaluation for diverse applications.

## User-Friendly Design with Simplicity at the Forefront

The LSPlus Series is designed with simplicity and user-friendliness in mind. The intuitive control console features a handheld console and a backlit LCD display, guiding users through various machine operations, eliminating the complexities often associated with material testing equipment.




## A Comprehensive Testing Suite Empowers Innovation

The LSPlus Series is compatible with NEXYGENPlus software, a powerful tool that unlocks a comprehensive range of test types, including tensile, compressive, flexural, and fatigue tests. This versatility empowers you to conduct a wide range of material assessments, driving innovation and product development.

## Industry-Leading Safety Standards for Peace of Mind

The LSPlus Series adheres to stringent safety standards, ensuring a secure and controlled testing environment. Features such as overload protection and automatic shut-off mechanisms safeguard both the machine and the operator, providing peace of mind throughout testing procedures.

## Invest in Reliable Equipment that Drives Growth

The LSPlus Series is a testament to Lloyd Instruments' commitment to providing high-quality testing solutions that empower businesses to achieve their goals. With its precision, versatility, user-friendliness, and comprehensive testing capabilities, the LSPlus Series is an investment that drives growth and innovation in material testing.

# 3 Comprehensive Testing Accessories

## Explore the Next Level of Testing Efficiency:

The Lloyd LSPlus Series is not just a testing machine; it's a comprehensive solution tailored to meet the diverse needs of modern testing environments. This innovative system seamlessly integrates with an array of grips, extensometers, load cells, and large-sample testing accessories, providing a unified platform for precision testing.

## Grips and Fixtures

Choose from a wide range of standard grips and fixtures as well as custom designed versions.

- Wedge action grips for rigid samples
- Pneumatic action grips for faster sample clamping
- Vice action grips for film and semi rigid materials
- Compression platens available in many sizes
- 3 and 4 point bending jigs
- Self tightening grips to reduce operator fatigue
- Bollard grips for wire and rope testing



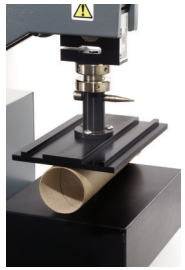

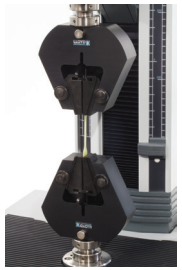

## Load Cells

The machine uses Plug'n'Play YLC Series load cells. The load cells feature anti-rotation collars to avoid load train twist and facilitating easy axial alignment. 8 interchangeable YLC load cells are available from 5N to 5000N and an accuracy of 0.5%.

## Large Sample Testing

The LSPlus is fully compatible with the unique pogo system from Lloyd Instruments.

The pogo system allows testing of very large samples up to 2 x 2 m (78.7 x 78.7 in) in size with the added benefit of optional elevated and low temperature testing capability.



## Extensometers

Lloyd has a complete range of contact and non-contact extensometers available.

- General Purpose Contacting Extensometers
- Non-Contacting Extensometer
- High Resolution Strain Gauge Extensometer
- High Resolution Non-Contacting Video Extensometer

## Flexible and Safe work area

The machine can be equipped with an expanded work table, a T-slot table or a drip tray. For safety splinter shields with electrical interlocks are available in three different heights.

# 4 NEXYGENPlus 4.1

## Your Complete Software Solution for Material Tests Today and in the Future

NEXYGENPlus 4.1 software is the hub of Lloyd Instruments' materials testing systems. It features an extensive library of pre-set test methods that meet domestic and international standards such as ASTM, DIN, EN and ISO along with advanced user configurable test set-ups ideal for product and component testing, R&D use and specialized testing. Easy-to-use NEXYGENPlus 4.1 software allows an operator to control and monitor all aspects of the system from a single front end, providing fast, reliable, accurate testing and data analysis.

Unique to the NEXYGENPlus 4.1 software is that all available standard modules and reporting functions are included in the software price. We call this an All Inclusive testing experience.

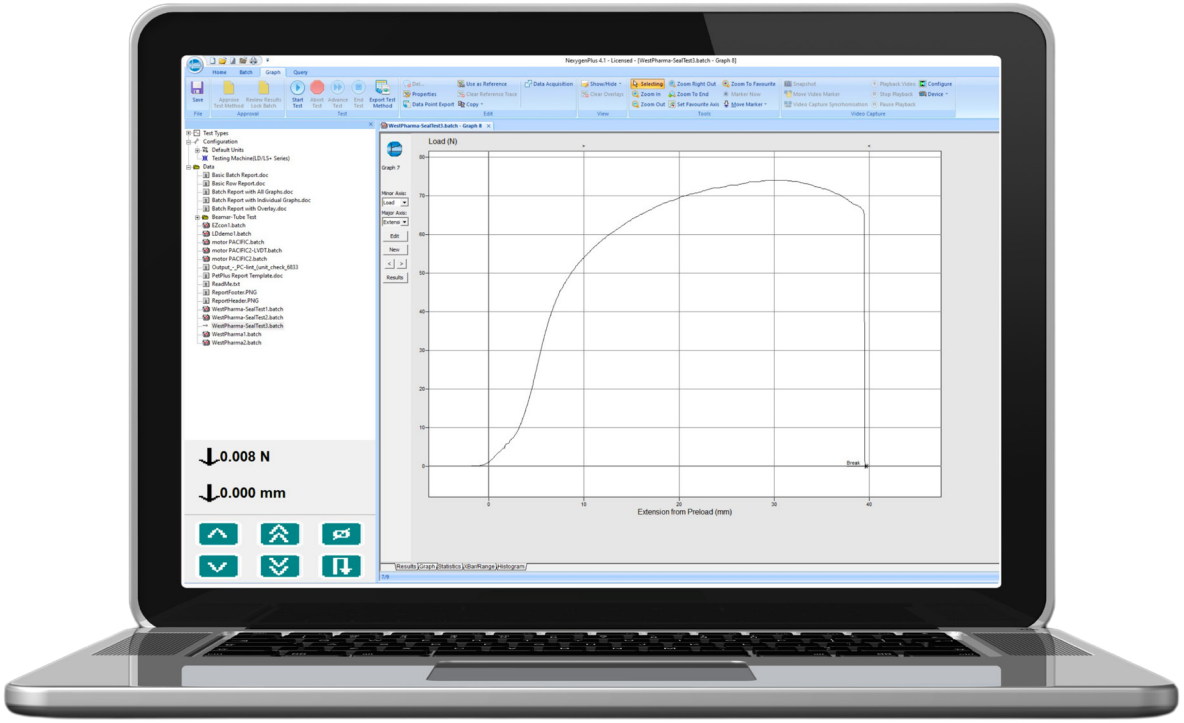


*"NEXYGENPlus 4.1 gets the job done easier, faster, and with more flexibility than has ever been possible before."*

### Powerful Analysis and Reporting Tools

NEXYGENPlus 4.1 helps you get the job done easier, faster, and with more flexibility than most other systems on the market. It provides almost unlimited testing and results processing capability in the familiar Excel and Word environment.

# 5 Specifications

## Dimensions:

| | | | | |
|---|---|---|---|---|
| A | Overall Machine height | LS1Plus<br>980 mm (38.6 in) | LS2.5Plus<br>1920 mm (75.6 in) | LS5Plus<br>1270 mm (50.0 in) |
| A | Extended Travel | LS1Plus<br>800 mm(31.5 in) | | |
| B | Width (excluding console) | 460 mm (18.1 in) | | |
| C | Depth | 557 mm (21.9 in) | | |
| D | Base Height | 108 mm (4.3 in) | | |
| E | Throat Depth | LS1Plus<br>180 mm (7.1 in) | LS2.5Plus &<br>150 mm (5.9 in) | LS5Plus<br>150 mm (5.9 in) |
| F | Max. Crosshead Travel,<br>Standard Travel | LS1Plus<br>500 mm (19.7 in) | LS2.5Plus<br>1400 mm (55.1 in) | LS5Plus<br>800 mm (31.5 in) |
| | Weight | LS1Plus<br>52 kg (115 lb) | LS2.5Plus<br>82kg (180 lb) | LS5Plus<br>67 kg (148 lb) |

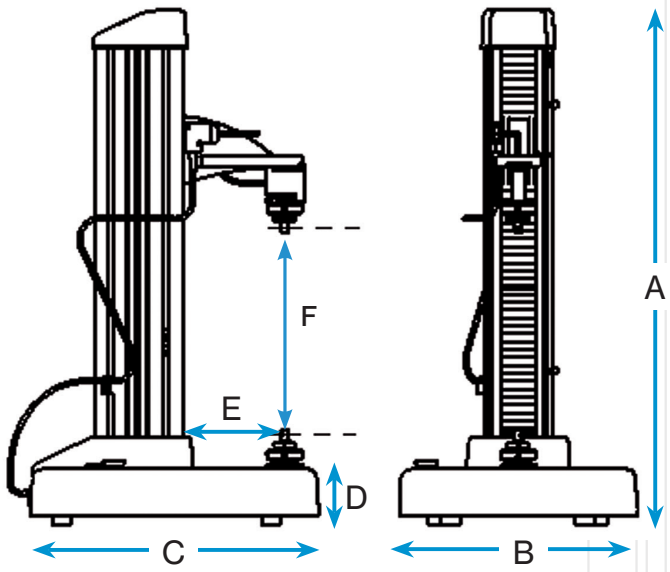


## Technical Specifications:

| | |
|---|---|
| Force Capacity<br>LS1Plus, LS2.5Plus, LS5Plus | 1000N/225 lbf, 2500 N (562 lbf), 5000N (1124 lbf) |
| Crosshead Speed Range<br>LS1Plus<br>LS2.5Plus, LS5Plus<2000N<br>LS5Plus >2000 | 0.01 to 2032 mm/min<br>0.001 to 2032 mm/min<br>0.001 to 1016 mm/min |
| Return Speed<br>LS1Plus, LS2.5Plus, LS5Plus | 2032 mm/min (80 in/min) |
| Speed Accuracy<br>LS1Plus<br>LS2.5Plus, LS5Plus | +/- 0.1% above 0.1 mm/min<br>+/- 0.1% above 0.01 mm/min |
| Extension Resolution | 0.04 microns |
| Load Cell | < ± 0.5% of reading down to 1/100 of load cell capacity<br>Resolution 32-bit A/D converter<br>Min. Load Resolution 1 part in $10^9$ |
| Extensometer Inputs | Optional, Analog and Digital |
| Data Transfer Rate to PC | 1 kHz |
| Supply Voltage | 207-253 VAC at 50 Hz or 103.5-126.5 VAC at 60 Hz |
| Load Measuring System | EN ISO 7500-1:2015 Class 0.5 ASTM E4 |
| Operating Temperature | 10 to 40° C /50 to 104° F |
| Control Modes | Position, Load Rate, and Strain Rate control |
| Position Repeatability | <10microns |
| Relative Humidity | 20% to 85% (Non-condensing) |

AMETEK®
SENSORS, TEST & CALIBRATION

# 6 Ordering

| Order number | | | Description |
|---|---|---|---|
| | | | LSPlus Series |
| | | | Model |
| 1+ | | | LS1Plus |
| 2.5+ | | | LS2.5Plus |
| 5+ | | | LS5Plus |
| | SH | | Standard Travel |
| | EH | | Extended Travel /2.5 Standard travel |
| | PH | | Standard Travel POGO Design* |
| | XH | | Extended Travel POGO Design*/2.5 POGO Design* |
| | | | Power |
| | | 115V | US Power Cord |
| | | 230V | UK and Euro Power Cord |
| | | 230V - CNAU | China and Australian Power Cord |
| | | | Order number sample |
| | | LS1+EH-230V | LS1Plus, Extended Travel, UK and Euro Power Cord |
| | | LS2.5+EH-230V | LS2.5Plus, Standard travel, UK and Euro Power Cord |

**Our unique POGO system allows testing of very large samples with the added benefit of optional elevated and low temperature testing capability.*

# 7 Support

When you invest in a Lloyd LSPlus Series Material tester, you're not just acquiring a piece of equipment; you're gaining a partner in material testing excellence. Beyond its exceptional performance and versatility, the LSPlus Series stands out for its unwavering customer support and comprehensive after-sales service.




## Expert Guidance and Training

Lloyd understands that maximizing the potential of your LSPlus Series tester may require training and expert guidance. Our dedicated team of engineers, technicians, and partners are here to provide you with personalized support throughout your testing journey. From initial setup and operation to troubleshooting and advanced testing techniques, our experts are readily available to address your needs and ensure you're getting the most out of your machine.

## Preventive Maintenance and Repairs

Preventive maintenance is key to ensuring your LSPlus Series tester delivers optimal performance and durability over its lifespan. Lloyd's proactive maintenance program keeps your machine in top condition, preventing costly downtime and ensuring consistent results. Our team of skilled technicians performs regular inspections, calibrations, and adjustments to maintain your machine's precision and reliability.

## Timely Repairs and Spare Parts

In the event of unexpected issues, Lloyd's rapid response repair service ensures your testing operations don't suffer. Our network of experienced technicians is dedicated to providing prompt and effective repairs, minimizing disruption to your workflow. Additionally, we maintain a vast inventory of genuine Lloyd spare parts, ensuring you have the necessary components to keep your machine up and running.

**USA**, Florida
Tel +1 (800) 527 9999
test.sales@ametek.com

**India**
Tel +91 22 2836 4750
test.sales@ametek.com

**Singapore**
Tel +65 6484 2388
test.sales@ametek.com

**China**, Shanghai
Tel +86 21 5886 5111
test.sales@ametek.com

**China**, Beijing
Tel +86 21 8526 2111-19
test.sales@ametek.com

**United Kingdom**
Tel +44 (0) 1243 833 370
test.sales@ametek.com

**France**
Tel +33 (0) 30 68 89 40
general.lloyd-instruments@ametek.fr

**Germany**
Tel +49 (0) 2159 9136 510
info.mct-de@ametek.de

**Denmark**
Tel +45 4816 8000
test.sales@ametek.com

LLOYD materials testing™ AMETEK

No part of this document may be reproduced or modified in any form or by any means, electronic or mechanical, without express written permission from AMETEK STC.

AMETEK® SENSORS, TEST & CALIBRATION

©2017 AMETEK Incorporated