LLOYD materials testing
AMETEK

LS+/TA+ Series Operation Manual

Single Column Test Stand

Models LS1+, LS2.5+, LS5+, TA1+



AMETEK®
SENSORS, TEST & CALIBRATION

Contents

Warnings 1
Overview 3
INTRODUCTION 3
MAIN COMPONENTS 4
..... 4
Handheld Controller 4
Assemblies and Features 4
Safety Features 5
EMERGENCY STOP 5
SAFE LINE BUTTON 5
CROSSHEAD MOVEMENT LIMITS 6
OPTIONAL SPLINTER SHIELD 6
SAFETY JOG 6
Setting Up the Machine and Hardware 7
UNPACKING 7
SETTING UP THE LS+ SERIES 7
LIFTING 8
Lifting With a Pallet 8
Lifting by Hand 8
SECURING THE LS+ Series TO A BENCH 8
POGO TESTING 9
Preparing the LS+ Series for Pogo Testing 9
FITTING THE HAND-HELD REMOTE 10
MAINS INPUT VOLTAGE SELECTION 11
Fuse Replacement 11
LOAD CELLS AND GRIPS 12
To Install a Load Cell 12
Grips and Adapters 13
Specifications 14
Dimensions: 14
Technical Specifications: 14
CONTACT US 15
Support 15
RETURNING PRODUCT TO AMETEK 15
WARRANTY 15

Warning

IMPORTANT: When the machine has been installed and before it is ready for use, the final user must conduct the final Risk Assessment on the machine, including all such safety measures (shields, guards, etc.) to satisfy the requirements of the Machinery Directive and EHSR (Essential Health and Safety Requirements). The final user must take the necessary steps to ensure the safety of the operator, other people, machines and property by providing guards, shields, screen, adequate lighting, adequate ventilation. Factors affecting required safety measures include industry, application, material under test, and location of use.

Operators of LS+ Series Materials Testers must heed the following warnings at all times.

WARNING: Pinch/Crush Hazard – Allow only one person to operate the system at a time.



Operator injury may result if more than one person operates the system. Before working inside the hazard area between grips or fixtures, ensure that no other personnel can operate the computer or any of the system controls.

WARNING: Pinch/Crush Hazard – Take care when installing or removing a specimen, assembly, structure, or load spring component.



Installation or removal of a specimen, assembly, structure, or load spring component involves working inside the hazard area between the grips and fixtures. Keep clear of the jaws of a grip or fixture at all times. Keep clear of the hazard area between the grips or fixtures during actuator or crosshead movement. Ensure that all actuator or crosshead movements necessary for installation or removal are slow and, where possible, at a low force setting.

WARNING: Hazard – Press the Emergency Stop Button whenever an unsafe condition exists.



The Emergency Stop button removes power or electrical drive from the testing system and brings the hazardous elements of the system to a stop as quickly as possible. It does not isolate the system from electrical power – other means are provided to disconnect the electrical supply. If you are concerned that safety may be compromised, stop the test using the Emergency Stop button. Investigate and resolve the situation that caused the use of the Emergency Stop button before you reset it.

WARNING: Flying Debris Hazard – Make sure that test specimens are installed correctly in grips or fixtures to ensure material cannot move, slip, slide or be ejected at high velocity.



Incorrect installation of test specimens creates stresses in grip jaws or fixture components that can result in breakage of these components. The high energies involved can cause the broken parts to be forcefully ejected at high velocity and a long distance from the test area. Install specimens in the center of the grip jaws in line with the load path. Insert specimens into the jaws by at least the amount recommended in your grip documentation. This amount can vary between 66% to 100% insertion depth. Refer to supplied instructions for your specific grips. Use any centering and alignment devices provided.

WARNING:Hazard – Protect electrical cables from damage and inadvertent disconnection.



The loss of controlling and feedback signals that can result from a disconnected or damaged cable causes an open loop condition that may drive the actuator or crosshead rapidly to its extremes of motion. Protect all electrical cables, particularly transducer cables, from damage. Never route cables across the floor without protection, nor suspend cables overhead under excessive strain. Use padding to avoid chafing where cables are routed around corners or through wall openings.

WARNING: Electrical Hazard – Disconnect the electrical power mains before removing the covers to electrical equipment.



Disconnect equipment from the electrical power mains before removing any electrical safety covers or replacing fuses. Do not reconnect the power source while the covers are removed. Refit covers as soon as possible.

WARNING: High/Low Temperature Hazard – Wear protective clothing when handling equipment at temperature extremes.





Materials testing is often carried out at extreme temperatures using ovens, furnaces, or cryogenic chambers. Extreme temperature means an operating temperature exceeding 60° C (140° F) or below 0° C (32° F). Use protective clothing such as gloves when handling equipment at these temperatures. Display a warning notice concerning low or high temperature operation whenever temperature control equipment is in use. Be aware that the hazard from extreme temperature can extend beyond the test's immediate area.

WARNING: Hazard – Do not switch the test machine off-line from computer control without first ensuring that the manual control will not cause actuator or crosshead movement.



The actuator or crosshead will immediately respond to manual control settings when the system is placed off-line from computer control. Before transferring to manual control, make sure that the control settings are such that unexpected actuator or crosshead movement cannot occur.

WARNING: Motion Hazard – Keep clear of the operating area of the machine unless deactivated.



This machine is an automated testing system which can be preprogrammed for specific motion sequences. This presents a hazard because its movements are not always predictable. The machine can be programmed to hold position for a time period, and then move at high speed without warning. During operation of the machine, it is important for users to keep fingers and hands outside Pinch and Crush areas. Be sure to deactivate the machine before touching material samples or entering the critical safety areas.

WARNING: Hazard – Set the appropriate limits before performing tests.



Operational limits are included within the testing system to suspend motion or shut off the system when upper and/or lower bounds of actuator or crosshead travel, or force or strain are reached during testing. Correct setting of operational limits by the operator, prior to testing, will reduce the risk of damage to test article and system, and associated hazard to the operator.

WARNING: Rotating Machinery Hazard – Never operate the machine with the covers removed.



If a cover must be removed, first disconnect equipment from mains power. Do not connect power while the covers are removed. Refit covers as soon as possible.

WARNING: Explosion Hazard – Wear eye protection and/or use protective shields or screens.



Wear eye protection and use protective shields or screens whenever a risk of injury to operators and observers exists from the failure of a test specimen, assembly, or structure, particularly where explosive disintegration may occur. Due to the wide range of specimen materials, assemblies, or structures that may be tested, any hazard resulting from the failure of a test specimen, assembly, or structure is entirely the responsibility of the owner and user of the equipment.

WARNING: Hazard – Ensure components of the load string are correctly pre-loaded to minimize the risk of fatigue failure.



Visually inspect highly stressed components such as grips and threaded adapters prior to every test for signs of wear or fatigue damage.

WARNING: Always maintain a clean work area free of debris or obstructions.



Remove load from any samples and ensure machine is not moving before cleaning or removing debris from the machine.

WARNING: Hazard – From Stored Potential Energy.



If power is lost while a sample such as a spring is under load, the crosshead may NOT remain in its current position. In this case, it can only be moved by restoring power. Until such time, a stored potential energy in the sample may present a safety hazard.

WARNING:



Ensure adequate lighting of work area.

WARNING:



Install machine in an area that will not allow the user to become distracted.

WARNING: Hazard – Risk of electric shock. Never operate machine with covers removed.



WARNING: Shock Hazard – Risk of electric shock. Do not replace the mains power cord with an inadequately rated cord.



CAUTION: User-performed maintenance is not required, and should not be performed on the LS+ Series Single Column Test Stand. If maintenance is required, please contact AMETEK for service.

Overview

INTRODUCTION

The Lloyd Instruments LS+ Series has an extensive range of features making it ideal for performing complex testing applications. The highly accurate load measurement and rapid data acquisition make the LS+ Series the perfect machine for a broad range of applications.

The high stiffness, single-column frame minimizes side loading of the sample under test. The crosshead is driven by a ball screw and a high-performance servomotor to achieve a wide range of speeds throughout a broad load range. A range of highly accurate, interchangeable load cells are available for tension, compression and cycling force measurements. The system is ideal for use in production, quality control, educational, and research environments.

The LS+ Series is used in conjunction with NexygenPlus 4, a Microsoft Windows® application. NexygenPlus 4, uses familiar Windows user controls, helping an operator quickly learn the system, and feel comfortable performing a wide range of tasks. Data from NexygenPlus 4, can be exported to Microsoft Excel® or Microsoft Word® for further manipulation and enhanced presentation. NexygenPlus 4 software contains a library of pre-programmed test setups for conducting fully automated tests, in accordance with international standards. In addition, customized tests can be created using a simple step by step set-up procedure.

We are confident that the LS+ Series will meet your expectations, and we are interested in any comments or suggestions you may have.

Please send us a note at: test.sales@ametek.com. Many features in this and our other products are a direct result of your comments!

Visit our website to register your LS+ Series. Registering gives you access to our latest product and software updates, and our full product support.

Note: We are constantly improving and evolving our equipment and releasing updates of our firmware and software. Release notes which detail the latest changes can be found on our website under the relevant product https://www.ametektest.com/products/Material-Testers/Single-Column-Test-Stands/LSPlus

We strive to inform you directly of updates as and when relevant but encourage you to consult the website if in doubt.

MAIN COMPONENTS

Handheld Controller



Display
Shows the current force applied and the crosshead position.

F1 and F2
Soft keys which access the menu options on the display.

Start
Starts the test.

Stop
Stops the test.

Zero
Sets the zero position at the beginning of a test.

Back to Zero
Returns the crosshead to the starting zero point.

Fast Jog Up
Quickly moves the crosshead up to a desired position.

Slow Jog Up
Slowly moves the crosshead up to a desired position.

Slow Jog down
Slowly moves the crosshead down to a desired position.

Fast Jog Down
Quickly moves the crosshead down to a desired position.

Assemblies and Features

Adheres to International Standards
The mechanical design of the LS Series adheres to international standards for industries including metal, composites, automotive, building materials, medical devices, and packaging.

Machine Stiffness
Rigid construction provides minimal deflection in the frame and crosshead.



Handheld Controller
See details at left.

Easy Grip Alignment
With our unique system, fixture and grip alignment is quick and easy.

Low-profile, Rugged Base
Our low-profile base provides a large working area.

Safety Features

EMERGENCY STOP

The Emergency Stop Button is provided to immediately remove power from the motor drive and stop the machine. To re-enable the start-up sequence, release the button by turning it clockwise one quarter turn.



SAFE LINE BUTTON

The safe line button is mounted on the left-hand side of the frame and is initially illuminated to indicate the crosshead motor circuit is ready but has not yet energized. The safe line circuit must be activated before the material tester can be used. Pressing the safe line button will turn the light off to indicate that the material tester is now ready for use. Use the main power switch to turn power off when the material tester is not in use.



The Safe Line button.



The Main Power switch.

WARNING: **Pinch/ Crushing Hazard** – Always ensure the safe line button is illuminated and the machine is not moving before reaching into cross head area. Always ensure the Emergency Stop button is visible and easily accessible to the user.

CROSSHEAD MOVEMENT LIMITS

The LS+ Series is fitted with two mechanically activated limit stops. These can be used as extra protection to stop load cells, grips or fixtures coming into contact, or to back up the tests upper and lower limits. Activating a limit stop will automatically stop the machine.

To Adjust a Limit Stop

1. Loosen the limit stop screw, move it to the top or bottom of its travel, and tighten the screw temporarily.
2. Drive the moving crosshead to the highest or lowest position it may go to safely, without damaging any fitted grips or fixtures.
3. Move the crosshead slightly away from the position established in step 2.
4. Loosen the screw and move it to the cross-head actuator and tighten in this position.

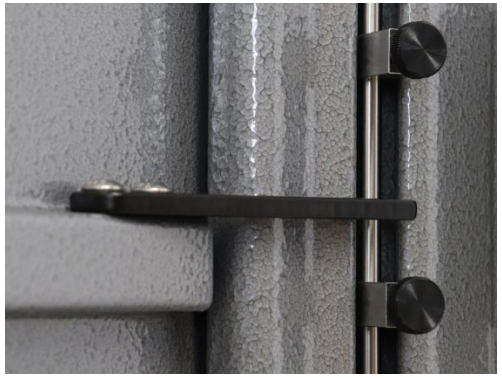

Optional Splinter Shield

OPTIONAL SPLINTER SHIELD

A transparent splinter shield is available as an option to enclose the test sample. A shield should be used if any danger of samples shattering during the test exists.

SAFETY JOG

The LS+ Series has a built-in safety feature to provide protection while jogging the machine. If the machine measures an unexpected load or friction while jogging, it will automatically stop.

Note: The load threshold level is selectable in the NexygenPlus 4 software.

Setting Up the Machine and Hardware

UNPACKING

All packing material should be carefully removed from the testing machine and a careful visual inspection should be made to ensure that there is no obvious transit damage. The following standard items should be in this package:

- Material testing frame
- Handheld Remote Control
- Power input cable
- Appropriate grip/adapter pins and anchor pins
- 2 x "C" spanner; 1 x 5 mm Allen key
- USB Cable
- Load cell bolt M12 x 25mm
- 8mm Hex Key for Load cell
- 2.5mm Hex Key for Eye-end adjustment
- Small Grip Pins
- Bench Mounting Kit

Some of the following optional equipment may also be included with your machine:

- NexygenPlus 4 software package
- Load cell
- Gripping fixture

If there is any damage or parts missing, please report this to your dealer or to AMETEK without delay.

SETTING UP THE LS+ SERIES

If this equipment is used in a manner not specified by the manufacturer, the protection provided by the equipment may be impaired. The LS+ Series should be installed in an area where adequate lighting is present in order to ensure safe use. Ensure the air flow around the base of the machine is not restricted.

Note: Do not position the LS+ Series so that it is difficult to operate. The mains supply machine socket should be easily accessible so that the mains power can be disconnected in case of an emergency.

The LS+ Series is a heavy machine so be careful choosing the location where it is installed. If it is to be bench mounted, ensure that the bench is capable of remaining firm and stable, and able to withstand the combined weight of the machine and any mounted accessories. See Specifications on page 15 for the weight of the LS+ Series. The LS+ Series test machines must be installed with the column oriented vertically; otherwise very low load measurements could be affected.

CAUTION: The LS+ Series must be positioned so that the front of the machine can be easily accessed. The Emergency Stop Button MUST NOT BE OBSTRUCTED in any way.

LIFTING

As the LS+ Series is heavy, use care when lifting. Lifting equipment should be used as necessary.

Lifting With a Pallet

The LS+ Series can have a pallet fitted under it so that it may be lifted to the desired position with a forklift hoist or suitable lifting trolley.

Lifting by Hand

The machine can be lifted manually using least 2 people as the machine weighs more than 50kg (110lb). Do not lift using the plastic base cover. Instead, lift at the aluminum bottom plate.

SECURING THE LS+ Series TO A BENCH

The test machine is heavy and cannot normally tip over. However, if there is the possibility that users can pull against the vertical column, there is a risk that the machine may be pulled over.

The template below shows the location of holes to secure the test machine to a bench top. Only two diagonal holes are necessary to secure the machine.

! WARNING: The LS+ Series must be secured to a rigid and stable supporting surface. Ignoring this requirement disregards the safety standards established for the machine.

Note: This attachment must be performed by authorized Lloyd Instruments service personnel.

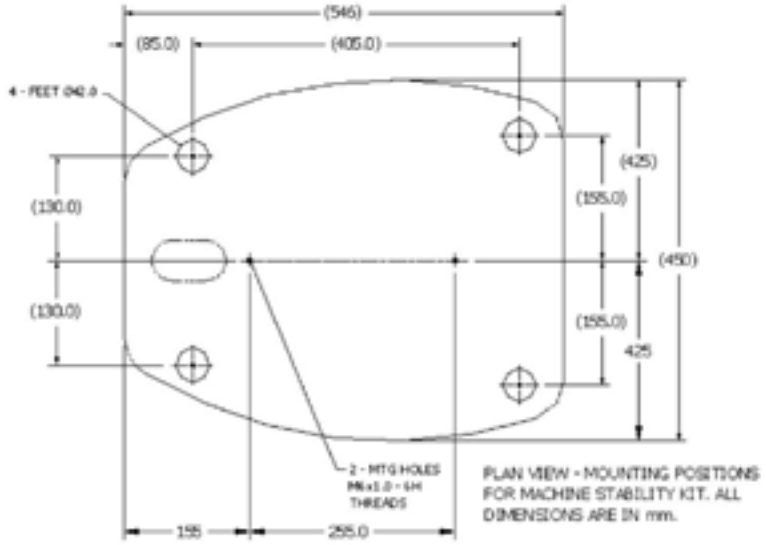

POGO TESTING

AMETEK produces a range of Lloyd Instruments machines that can be mounted on specially designed frames that can be used for testing a wide range of bulky items such as cardboard cartons, crates, and furniture.

Machines configured with the POGO option have a linear bearing fitted in the machine base. A rod running through the crosshead connects the load cell and compression platens which are mounted in the frame below the material testing machine.

Preparing the LS+ Series for POGO Testing

Note: Since the size and specifications of POGO mounting frames will vary depending on individual customer requirements, the following is a general procedure for preparing the LS+ Series for POGO testing. Refer to the instructions for set up and wiring supplied with your individual mounting frame.

▸ To Prepare the LS+ Series for POGO Testing – First, position the POGO mounting frame, then fit the frame mounting plates to the LS+ Series.

! CAUTION: To avoid damage to the equipment and/or possible injury, AMETEK recommends that the fitting of the supplied frame mounting plates be carried out by a Lloyd Instruments appointed commissioning engineer, trained to suit the requirements and needs of the customer.

1 Follow the fitting and wiring instructions for the Console and Emergency Stop Buttons.

Note: The positioning of controls is the responsibility of the final user, who should ensure (as part of the Risk Assessment) that sufficient stop buttons are provided.

2 Lift the LS+ Series onto the mounting frame. See Lifting on page 8 for proper lifting methods.

3 Secure the LS+ Series to the mounting frame.

! CAUTION: Because the mounting plates protrude from the bottom of the machine, no attempt should be made to stand the machine on its own. It will only be stable when it is fitted and secured to the mounting frame.

4 Insert the POGO rod through the bearing on the lower (fixed) crosshead and connect to the bottom platen.

5 Connect the load cell.

Once the LS+ Series is installed, wired, and ready for use, the user must conduct the final Risk Assessment of the machine, including all safety measures (shield, guard, etc.) to satisfy the requirements of the Machinery Directive and EHSR (Essential Health and Safety Requirements).

FITTING THE HAND-HELD REMOTE

The height of the console can be adjusted to give the best position for viewing and operation.

▶ To Connect the Remote to the LS+ Series

1 Plug the connector attached to the remote into the rear of the machine.

2 Adjust the height of the remote using the position locking lever.

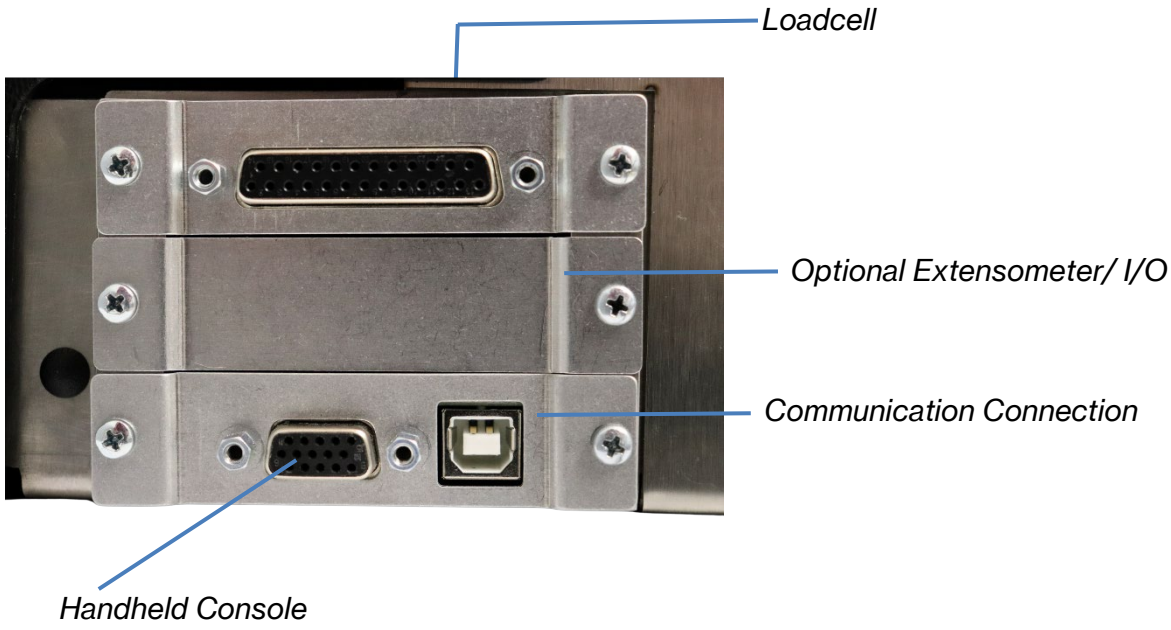

MAINS INPUT VOLTAGE SELECTION

The LS+ Series can be used with mains power of either 230VAC ±10% or 115VAC ±10%, with frequency from 50Hz to 60Hz.

CAUTION: Check to ensure the correct voltage of your mains power supply has been selected on the input connector BEFORE connecting power to the machine.

Fuse Replacement

1. Remove any power to the machine, then use a small, flat-blade screwdriver to open the voltage selector access panel.
2. With the same flat-blade screwdriver, remove the voltage selector/fuse-holder and replace the fuse.
3. Rotate the voltage selector to show the required voltage at the top of the holder
4. Reinstall the voltage selector, push to close and ensure the required voltage is visible in the small window.

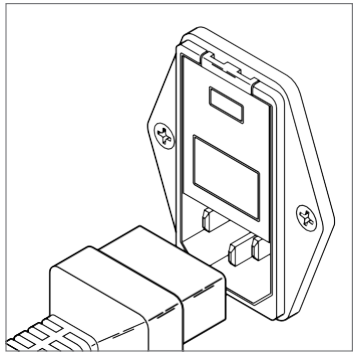

Remove power to the unit.

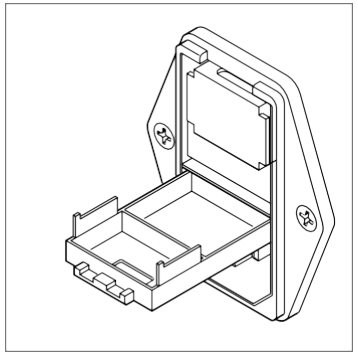

Open the voltage selector access panel.

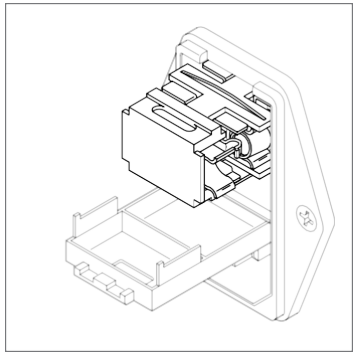

Remove the voltage selector/fuse-holder.

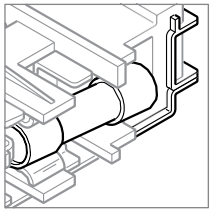

Note: The fuses must be installed with one end touching the pin end of the fuse holder.

WARNING: Replace with the factory supplied fuses as shown on the rear label of the test machine.

WARNING: To avoid the risk of electrical shock, equipment must be connected to an outlet with a protective earth ground, using the power cord provided.

LOAD CELLS AND GRIPS

To Install a Load Cell

1 Place the load cell adapter through the hole in the moving crosshead with the thread side down.

2 Screw the load cell adapter into the load cell. Be careful not to overtighten low-capacity load cells.

Note: Take care to ensure that the locating pin on the load cell fits in one of the holes on the underside of the moving crosshead.



3 Check that the connecting cable is on the same side as the connecting socket, then tighten the load cell adapter with the C spanner provided.

4 Insert the load cell plug in the socket on the rear of the machine (see Figure 1), and finger-tighten the two retaining screws.

5 Fit the eye end to the load cell and tighten with the C spanner.



Grips and Adapters

We offer a complete line of grips and adapters to meet your specific needs. Each can be found on our website at ametektest.com with individual catalogs and specifications included.

Installing the Grips

- When installing the heavy upper grips on the load cell, avoid bumping the eye end. If the grip is a close fit, DO NOT FORCE IT. Set, or re-set, the bottom limit stops so the grips will not meet when the crosshead is lowered.
- In both tension and compression tests, center the specimen in line with the axis of the load cell and the bottom fixed anchor pin to avoid side thrust.



Proper alignment of the test specimen.

Note: In compression tests, care must be taken to avoid bringing the platens together or against solid specimens at high speed. Ensure that the lower crosshead limit is set correctly. If a special lower fixture is used, ensure that it is fixed in position so that it does not block the normal downward movement of the upper fixture.

- Avoid overloading beyond the rated capacity of the load cell. Prior to testing, ensure that the maximum force anticipated will not exceed the capacity of the cell installed.

Lloyd Instruments load cells are built to exceed the standards as set out by ASTM, BS, DIN etc. Load cells on all models of LS+ Series machines are user-changeable. Various capacities are available from 5N up to the capacity of the frame. While cells may be used below 10% of capacity, it is recommended to use a lower force cell such that the test force will fall in the upper 90% of its range. This will give the best signal to noise performance of the load measuring system.

For some samples, the LS+ Series alone will not provide the most accurate strain analysis available. To increase accuracy, we suggest one of our many Lloyd Instrument extensometers. Our extensometers can be added to an LS+ Series machine, and the results can be read by our NexygenPlus software. For details on our various extensometers, please visit our website at ametektest.com.

Specifications

Dimensions:

A	**Standard Travel**	LS1+ 500 mm (19.7 in)	LS2.5+ 1400mm (55 1in)	LS5+ 800mm (31.5 in)	
A	**Extended Travel**	LS1+ 800 mm(31.3 in)			
B	**Width (excluding console)**	460 mm (18.1 n)			
C	**Depth**	557 mm (21.9 in)			
D	**Base Height**	108 mm (4.3 in)			
E	**Throat Depth**	LS1+ 180 mm (7.1 in)	LS2.5+ & LS5+ 180 150 mm (5.9 in)		
	Weight	LS1+ 52 kg (115 lb)	LS1+ extended 62 kg (137 lb)	LS2.5+ 82kg (180 lb)	LS5+ 67 kg (148 lb)

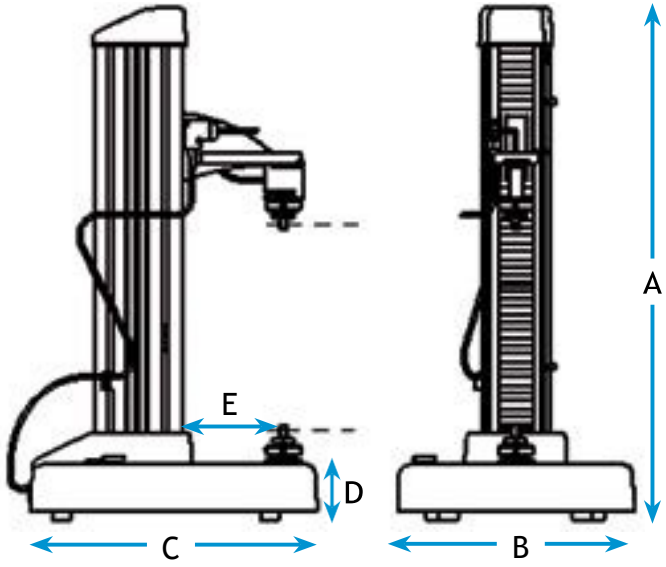

Technical Specifications:

Force Capacity LS1+, LS2.5+, LS5+	1000N/225 lbf, 2500 N (562 lbf), 5000N (1124 lbf)
Crosshead Speed Range LS1Plus LS2.5Plus, LS5Plus<2000N LS5Plus >2000	0.01 to 2032 mm/min 0.001 to 2032 mm/min 0.001 to 1016 mm/min
Return Speed LS1+, LS2.5+, LS5+	2032 mm/min (80 in/min)
Speed Accuracy LS1Plus LS2.5Plus, LS5Plus	+/- 0.1% above 0.1 mm/min +/- 0.1% above 0.01 mm/min
Extension Resolution	0.04 microns
Load Cell	< ± 0.5% of reading down to 1/100 of load cell capacity Resolution 32-bit A/D converter Min. Load Resolution 1 part in 109
Extensometer Inputs	Optional, Analog and Digital
Data Transfer Rate to PC	1 kHz
Supply Voltage	207-253 VAC at 50 Hz or 103.5-126.5 VAC at 60 Hz
Load Measuring System	EN ISO 7500-1:2015 Class 0.5 ASTM E4
Operating Temperature	10 to 40° C /50 to 104° F
Control Modes	Position, Load Rate, and Strain Rate control
Position Repeatability	<10microns

Support

CONTACT US

United Kingdom
Tel +44 (0)1243 833 370
test.sales@ametek.com

France
Tel +33 (0)1 30 68 89 40
general.lloyd-instruments@ametek.fr

Germany
Tel +49 (0)2159 9136 510
info.mct-de@ametek.de

Denmark
Tel +45 4816 8000
test.sales@ametek.com

USA
Florida
Tel +1 (800) 527 9999
test.sales@ametek.com

India
Tel +91 22 2836 4750
test.sales@ametek.com

China
Shanghai
Tel +86 21 5868 5111

Beijing
Tel +86 10 8526 2111-19
test.sales@ametek.com

Singapore
Tel +65 6484 2388
test.sales@ametek.com

RETURNING PRODUCT TO AMETEK

Please contact your sales representative to complete a Return Material Authorization (RMA) form and/or receive an RMA number.
Return/shipping instructions will be provided with the RMA number.

WARRANTY

This instrument is warranted against defects in workmanship, material and design for one (1) year from date of delivery to the extent that AMETEK will, at its sole option, repair or replace the instrument or any part thereof which is defective, provided, however, that this warranty shall not apply to instruments subjected to tampering or, abuse, or exposed to highly corrosive conditions.

THIS WARRANTY IS IN LIEU OF ALL OTHER WARRANTIES WHETHER EXPRESS OR IMPLIED AND AMETEK HEREBY DISCLAIMS ALL OTHER WARRANTIES, INCLUDING, WITHOUT LIMITATION, ANY WARRANTY OF FITNESS FOR A PARTICULAR PURPOSE OR MERCHANTABILITY. AMETEK SHALL NOT BE LIABLE FOR ANY INCIDENTAL OR CONSEQUENTIAL DAMAGES, INCLUDING, BUT NOT LIMITED TO, ANY ANTICIPATED OR LOST PROFITS.

This warranty is voidable if the purchaser fails to follow any and all instructions, warnings or cautions in the instrument's Instruction Manual.

If a manufacturing defect is found, AMETEK will replace or repair the instrument or replace any defective part thereof without charge; however, AMETEK's obligation hereunder does not include the cost of transportation, which must be borne by the customer. AMETEK assumes no responsibility for damage in transit, and any claims for such damage should be presented to the carrier by the purchaser.

AMETEK®

SENSORS, TEST & CALIBRATION

© 2024 AMETEK Incorporated

5777. B 2024