Chatillon
force measurement
AMETEK

TCM Series Operation Manual

Motorized Test Stand

Model 100 and 350



AMETEK
SENSORS, TEST & CALIBRATION

Contents

Reference and Registration **1**
Welcome 1
Warnings **2**
Overview **3**
Introduction 3
Parts Included with the TCM Series 3
Chatillon Force Gauges 3
Front Panel Buttons 4
Start/Stop 4
Return to Zero (RTZ) 4
Jog Up 5
Jog Down 5
Zero 5
Speed Up 5
Speed Down 5
Mode 6
Front Panel Indicators and Display 6
Speed Display 6
Millimeters per Minute 7
Inches per Minute 7
Compression 7
Tension 7
Modes of Operation 7
Compression-Standard 7
Tension-Standard 7
Compression-Cycle 8
Tension-Cycle 8
Rear Panel Ports and Connections 9
Communication Port 9
USB Port 9
Digital Force Gauge (DFG) Port 9
Main Power Switch 10
Main Power Fuse 10
IEC Power Cord Connection 10
Remote Foot Switch 10
Emergency Switch 11
Fault and Error Codes 11
Securing the TCM to a Workbench 12
Specifications **13**
TCM Dimensions 14
TCM Mounting Plate Options 15
Standard Mounting Plate 15
Optional Multi-Thread Plate Kit (p/n SPK-TCM-005) 15
Support **16**
Optional Accessories 16
Contact Us 17
Returning product to AMETEK 17
Warranty 17

Reference and Registration

WELCOME

Thank you for your purchase of the TCM Series Motorized Test Stand. Your TCM is a combination of leading edge technology and rugged industrial design.

To get the most out of future improvements and updates, be sure to register your product on our website. There, you will also find a collection of resources to help you get the most out of your motorized test stand. We are constantly updating documentation (Manuals & Data Sheets; Product Release Notes) in addition to software and certificates. So check back on the website periodically for the latest news and information regarding your TCM and other related products you may find of interest.

We hope the TCM meets your expectations. We're interested in any comments or suggestions you might have to help us improve the product and to help us enhance your user experience.



Product Registration

Documentation

Release Notes

Software

Certificates

Comments



Warnings

IMPORTANT: When the machine has been installed and before it is ready for use, the final user's Authorized Environmental Health and Safety Officer must conduct the final Risk Assessment on the machine, including all such safety measures (shields, guards, etc.) to satisfy the requirements of the Machinery Directive and EHSR (Essential Health and Safety Requirements).

The user's Authorized Environmental Health and Safety Officer must take the necessary steps to ensure the safety of the operator, other people, machines and property by providing guards, shields, screen, adequate lighting, adequate ventilation. Factors affecting required safety measures include industry, application, material under test, and location of use.

! Operators of TCM Series Materials Testers must heed the following warnings at all times.



Crush Hazard—Allow only one person to handle or operate the system at a time. Operator injury may result if more than one person operates the system. Before working inside the hazard area between grips or fixtures, ensure that no other personnel can operate the computer or any of the system controls.



Crush Hazard—Take care when installing or removing a specimen, assembly, structure, or load string component. Installation or removal of a specimen, assembly, structure, or load string component involves working inside the hazard area between the grips and fixtures. Keep clear of the jaws of a grip or fixture at all times. Keep clear of the hazard area between the grips or fixtures during actuator or crosshead movement. Ensure that all actuator or crosshead movements necessary for installation or removal are slow and, where possible, at a low force setting.



Hazard—Press the Emergency Stop button whenever you consider that an unsafe condition exists. The Emergency Stop button removes power or electrical drive from the testing system and brings the hazardous elements of the system to a stop as quickly as possible. It does not isolate the system from electrical power—other means are provided to disconnect the electrical supply. If you are concerned that safety may be compromised, stop the test using the Emergency Stop button. Investigate and resolve the situation that caused the use of the Emergency Stop button before you reset it.



Flying Debris Hazard—Make sure that test specimens are installed correctly in grips or fixtures in order to eliminate stresses that can cause breakage of grip jaws or fixture components. Incorrect installation of test specimens creates stresses in grip jaws or fixture components that can result in breakage of these components. The high energies involved can cause the broken parts to be projected forcefully some distance from the test area. Install specimens in the center of the grip jaws in line with the load path. Insert specimens into the jaws by at least the amount recommended in your grip documentation. This amount can vary between 66% to 100% insertion depth. Refer to supplied instructions for your specific grips. Use any centering and alignment devices provided.



Hazard—Protect electrical cables from damage and inadvertent disconnection. The loss of controlling and feedback signals that can result from a disconnected or damaged cable causes an open loop condition that may drive the actuator or crosshead rapidly to its extremes of motion. Protect all electrical cables, particularly transducer cables, from damage. Never route cables across the floor without protection, nor suspend cables overhead under excessive strain. Use padding to avoid chafing where cables are routed around corners or through wall openings.



Electrical Hazard—Disconnect the electrical power mains before removing the covers to electrical equipment. Disconnect equipment from the electrical power mains before removing any electrical safety covers or replacing fuses. Do not reconnect the power source while the covers are removed. Refit covers as soon as possible.





High/Low Temperature Hazard—Wear protective clothing when handling equipment at temperature extremes. Materials testing is often carried out an non-ambient temperatures using ovens, furnaces, or cryogenic chambers. Extreme temperature means an operating temperature exceeding 60° C (140° F) or below 0° C (32° F). Use protective clothing such as gloves when handling equipment at these temperatures. Display a warning notice concerning low or high temperature operation whenever temperature control equipment is in use. You should note that the hazard from extreme temperature can extend beyond the immediate area of the test.



Hazard—Do not place a testing system off-line from computer control without first ensuring that no actuator or crosshead movement will occur upon transfer to manual control. The actuator or crosshead will immediately respond to manual control settings when the system is placed off-line from computer control. Before transferring to manual control, make sure that the control settings are such that unexpected actuator or crosshead movement cannot occur.



Robotic Motion Hazard—Keep clear of the operating envelope of a robotic device unless the device is deactivated. The robot in an automated testing system presents a hazard because its movements are difficult to predict. The robot can go instantly from a waiting state to high speed operation in several axis of motion. During system operation, remain outside of the operating envelope of the robot. Deactivate the robot before entering the envelope for any purpose, such as reloading the specimen magazine.



Hazard—Set the appropriate limits before performing tests. Operational limits are included within the testing system to suspend motion or shut off the system when upper and/or lower bounds of actuator or crosshead travel, or force or strain are reached during testing. Correct setting of operational limits by the operator, prior to testing, will reduce the risk of damage to test article and system, and associated hazard to the operator.



Rotating Machinery Hazard—Never operate the machine with the covers removed. If a cover must be removed, first disconnect equipment from mains power. Do not reconnect any power supply while the covers are removed. Refit covers as soon as possible.



Explosion Hazard—Wear eye protection and use protective shields or screens whenever any possibility exists of a hazard from the failure of a specimen, assembly, or structure under test. Wear eye protection and use protective shields or screens whenever a risk of injury to operators and observers exists from the failure of a test specimen, assembly, or structure, particularly where explosive disintegration may occur. Due to the wide range of specimen materials, assemblies, or structures that may be tested, any hazard resulting from the failure of a test specimen, assembly, or structure is entirely the responsibility of the owner and user of the equipment.



Hazard—Ensure components of the load string are correctly pre-loaded to minimize the risk of fatigue failure. Visually inspect highly stressed components such as grips and threaded adapters prior to every test for signs of wear or fatigue damage.



Always maintain a clean work area free of debris or obstructions. Remove load from any samples and ensure machine is not moving before cleaning or removing debris from the machine.



Hazard—From Stored Potential Energy. If power is lost while a sample if under load, the crosshead may remain in its current position. In this case, it can only be moved by restoring power. Until such time, a stored potential energy in the sample may present a hazard.



Ensure adequate lighting of work area. Install machine in an area that will not allow the user to become distracted.



Hazard—Risk of electric shock. Never operate machine with covers removed.



Hazard—Risk of electric shock. Do not replace the mains power cord with an inadequately rated cord.



Hazard—Risk of tipping over. User must take proper precautions to assure unit does not tip over. See manual for securing information.

! CAUTION: User-performed maintenance is not required, and should not be performed on the TCM Motorized Test Stand. If maintenance is required, please contact AMETEK for service.

Overview

INTRODUCTION

Two CHATILLON® TCM Series motorized test stands are available and covered by this Operation Manual:

- TCM100 Series (100 lbf, 500 N)
- TCM350 Series (350 lbf, 2500 N)

TCM Series motorized testers are designed to be use with Chatillon DF Series digital force gauges.

The TCM Series has a compact design, making it ideal for the laboratory or production environment. The machine is designed for benchtop installations.

These testers are designed to operate in a vertical orientation

Parts Included with the TCM Series

▶ Standard Accessories

Description	Part Number	Qty
1/2-20F Thread Base Plate	6344-01	1
Base Plate Screws	6541	2
Hex Key 5mm	3178	1
Magnetic Cable Clip	6590	2
4" Cable Ties	CBT/1046/00	4
Safety Sheet and Registration Card	6615	1
Users Manual (FR) – Only with TCM -230 Version	6616	1
SCREW, 10-32 X 0.5, FLAT, HEX, SS	6973	4
WRENCH, HEX-L, 1/8", BALL END	6714	1
Power Cable	—	1
TCM USB to PC USB Cable, 3M (ForceTest & Flash Memory Upgrade)	SPK-TCM-016	1
TCM to DFG Cable (RS232 & Load Limit Communication to TCM)	SPK-TCM-034	1

▶ TCM Version A Accessories (p/n SPK-TCM-003)

Description	Part Number	Qty
1/2-20M to 5/16-18M Coupling	17162	1
1/2-20M to 10/32M Coupling	NC003238	1

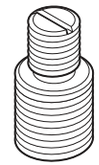

1/2-20M to 5/16-18M

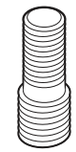

1/2-20M to 10/32M

▶ TCM Version B Accessories (p/n SPK-TCM-004)

Description	Part Number	Qty
C-Spanner Wrench Spanner, Wrench 42 mm diameter	NC003030	1
5/8" Eye Adapter to 1/2-20 Male Thread with Pin & Locking Rings	SPK-TLC-003	1
5/8" Eye End Kit and Grip Pin for Gauges	SPK-TCM-001	1

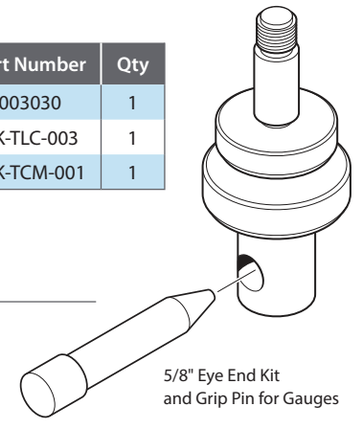

5/8" Eye End Kit and Grip Pin for Gauges

Chatillon Force Gauges

The following Chatillon force gauges are recommended for use with the TCM Series:

- DFX II Series (Integral Loadcell)
- DFE II Series (Integral Loadcell with Outputs)
- DFS II Series (Integral Loadcell with Outputs)
- DFS II R Series (Dedicated Remote Loadcell with Outputs)
- DFS II R ND Series (Non Dedicated Remote Detachable Loadcell with Outputs)

FRONT PANEL BUTTONS

There are eight touch sensitive buttons on the front panel of the TCM used to set the crosshead speed, set the modes of operation and control the motion of the crosshead. The haptic buttons vibrate when the command is registered by the TCM.

The buttons are as follows:

- Start/Stop
- Return to Zero (RTZ)
- Jog Up
- Jog Down
- Zero (or Home Position)
- Speed Up
- Speed Down
- Mode

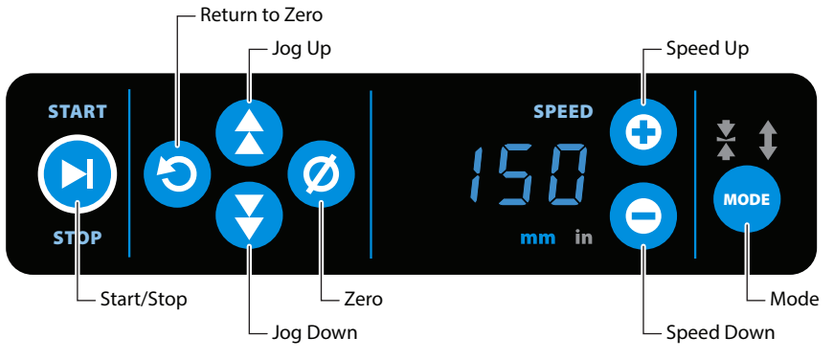

Start/Stop

The Start button will begin a test at the speed indicated on the display. The direction of the test is indicated by the flashing Compression or Tension arrows. The Stop button will end any travel movement of the TCM and the display will flash **END**. To start, hold for more than 0.5 seconds.

Return to Zero (RTZ)

Hold the RTZ button for 0.5 seconds to start the return to the home location at max speed (unregulated max speed, but ≥ 40 in/min).

During return, the display will flash between **RTZ** and **UP** or **DN** to indicate the direction of travel. Once the unit has reached the home position, **RTZ** will revert back to indicating the net machine travel speed and show **0000** to indicate that the crosshead has reached the Zero Position.

Jog Up



Jog crosshead in the positive direction at speed indicated on display. **UP** will briefly appear on the display indicating success and will flash **STOP** upon the button release.

When the Mode is set to Tension, and the Jog Up button is pressed, the crosshead will move up at the set speed. The message on the display will flash between **UP** and the set speed.

When the mode is set to Compression, and the Jog Up button is pressed, the crosshead will move up at maximum speed. The message on the display will flash between **UP** and **JOG**.

Jog Down



Jog crosshead in the negative direction at the speed indicated on display. **DN** will briefly appear on the display indicating success and will flash **STOP** upon the button release.

When the mode is set to Tension, and the Jog Down button is pressed, the crosshead will move down at maximum speed. The message on the display will flash between **DN** and **JOG**.

When the mode is set to Compression, and the Jog Down button is pressed, the crosshead will move down at the set speed. The message on the display will flash between **DN** and the set speed.

Note: The jog speed will always be at unregulated maximum speed (> 40 in/min) when jogging away from the test area relative to the Tension or Compression selected Mode.

Zero



Hold the Zero button for 0.5 seconds to zero the TCM position. On release, the ***home*** or ***zero*** location will be set internally to the machine. After zeroing the TCM position, the display will show **ZERO** to indicate the unit has been zeroed. The display will then alternate between **0000** and the current speed in the home position. If the Head is moved away from the zero position, only the speed will be displayed to confirm that the TCM is away from the zero position.

Speed Up



Increase speed indicated on the display by 0.1 in/min or by 1 mm/min, depending on the units indicated. Pressing and holding this button will rapidly increase the speed.

Note: 40.0 in/min and 1016 mm/min are the maximum speeds allowed.

Speed Down



Decrease speed indicated on the display by 0.1in/min or by 1mm/min, depending on the units indicated. Pressing and holding this button will rapidly decrease the speed.

Note: 0.2 in/min and 5 mm/min are the minimum speeds allowed.

Mode

MODE The Mode button is used for two purposes. It sets the mode of crosshead operation for the TCM and it is used to set the crosshead speed units.

On <1s duration button press, switch between the following modes:

Tension ⇨ Compression ⇨ Cycle / Tension ⇨ Cycle / Compression ⇨ Tension.

Note: The mode selection will continue to repeat after the Cycle / Compression has been reached.

Holding the button for 5 or more seconds will toggle units between: in ⇨ mm ⇨ in

FRONT PANEL INDICATORS AND DISPLAY

There are five indicators on the front panel of the TCM used to indicate the crosshead speed, speed units, mode of operation, and control the motion of the crosshead.

The indicators are as follows:

- Speed Indication (Display)
- mm (Millimeters per Minute)
- in (Inches per Minute)
- Compression
- Tension



Speed Display



The 7-segment LED display will indicate the speed at which it has been set to run at and will be in the units (inches or millimeters) selected by the operator.

Millimeters per Minute



When the **mm** indicator is illuminated, the units for the crosshead speed (as indicated on the Speed Indication Display) will be in millimeters per minute.

Inches per Minute



When the **in** indicator is illuminated, the units for the crosshead speed (as indicated on the Speed Indication Display) will be in inches per minute.

Compression



When the compression arrow indicator is illuminated, the crosshead will move in the compression direction when the Start/Stop button is depressed. (See Modes of Operation below).

Tension



When this the Tension arrow indicator is illuminated, the crosshead will move in the tension direction when the Start/Stop button is depressed. (See Modes of Operation below).

MODES OF OPERATION

Note: In all modes, when a DFG is connected to the TCM and a DFG set Force Limit is reached, the TCM will stop and the Message "Load" will be displayed.

Compression-Standard



When only the Compression indicator is illuminated, this indicates the ***Compression-Standard*** mode of operation. In this mode, the crosshead will move in the compression direction (at the speed indicated on the display) when instructed to do so by pressing the Start/Stop button. It will automatically continue in this direction until it reaches the adjustable limit switch position. If the mechanical limit switch is reached, the display will show **BOT** and the Set Speed to indicate that the lower (bottom) travel limit switch has been reached. Further, if a force gauge was set to ***XMIT LIMIT*** (transmit a force limit), the TCM will stop when a low signal is sent over the serial port. The XMIT will stop the TCM only when connected to the Test Stand using the XMIT cable (SPK-TCM-018) into the DFG Port.

When moving in the compression direction, the display will flash alternatively between **DN** and the current speed.

Tension-Standard



When only the Tension indicator is illuminated, this indicates the ***Tension-Standard*** mode of operation. In this mode, the crosshead will move in the tension direction (at the speed indicated on the display) when instructed to do so by pressing the Start/Stop button. It will automatically continue in this direction until it reaches the adjustable limit switch position. If the mechanical limit switch is reached, the display will show **TOP** and the set speed to indicate that the upper (top) travel limit switch has been reached. Further, if a force gauge was set to ***XMIT LIMIT*** (transmit a force limit), the TCM will stop when a high signal is sent over the serial port. The XMIT will stop the TCM only when connected to the Test Stand using the XMIT cable (SPK-TCM-034) into the DFG Port.

When moving in the tension direction, the display will flash alternatively between **UP** and the current speed.

Compression-Cycle



When the Compression indicator is illuminated, and the Tension indicator is dimly lit, this indicates the Compression-Cycle mode of operation. In this mode, the crosshead will move in the compression direction (at the speed indicated on the display) when instructed to do so by pressing the Start/Stop button. It will automatically continue in this direction until it reaches the lower adjustable limit switch position, at which point it will change to the tension direction and continue until it reaches the upper adjustable limit switch position. Upon reaching the upper adjustable limit switch position, it will change direction again and continue to cycle back and forth between the two limit switch positions. The Cycle mode can also be controlled by Force when setting the Load Limits on the force gauge and connecting the force gauge to the TCM using cable SPK-TCM-034. When the crosshead is in motion for this mode, the Compression indicator will flash the following messages during the cycle:

DN with the Cycle Count C001, C002…
then **UP** with the Cycle Count C001, C002.

The Maximum cycle count is 999.

Pressing the Start/Stop button again will stop the crosshead motion. Further, if a force gauge was set to ***XMIT LIMIT,*** the TCM will continue to cycle to both limits when a low or high signal is sent to the DFG port. The XMIT will stop the TCM only when connected to the Test Stand using the XMIT cable into the DFG Port.

Tension-Cycle



When the Tension indicator is illuminated, and the Compression indicator is dimly lit, this indicates the Tension-Cycle mode of operation. In this mode, the crosshead will move in the compression direction (at the speed indicated on the display) when instructed to do so by pressing the Start/Stop button. It will automatically continue in this direction until it reaches the upper adjustable limit switch position, at which point it will change to the tension direction and continue until it reaches the lower adjustable limit switch position. Upon reaching the lower adjustable limit switch position, it will change direction again and continue to cycle back and forth between the two limit switch positions. The Cycle mode can also be controlled by Force when setting the Load Limits on the force gauge and connecting the force gauge to the TCM using cable SPK-TCM-034. When the crosshead is in motion for this mode, the Tension indicator will flash the following messages during the cycle:

UP with the Cycle Count C001, C002…
then **DN** with the Cycle Count C001, C002.

The Maximum cycle count is 999.

Pressing the Start/Stop button again will stop the crosshead motion. Further, if a force gauge was set to ***XMIT LIMIT,*** the TCM will continue to cycle to both limits when a low or high signal is sent to the DFG port. The XMIT will stop the TCM only when connected to the Test Stand using the XMIT cable into the DFG Port.

REAR PANEL PORTS AND CONNECTIONS

The rear panel has provisions for the following functions and connections. These are as follows:

- Communication Port (DB 9-pin Female)
- Digital Force Gauge (DFG) Port DB 9-pin Male
- USB Port
- Remote Foot Switch Port (optional)
- Main Power Switch
- Main Power Fuse
- IEC Power Cord Connection

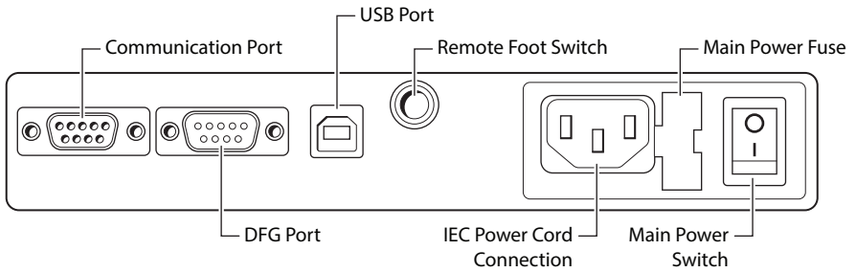

Communication Port

The communication port will be used for future TCM enhanced capabilities.

USB Port

This is a USB Type B connector and is electrically isolated from the TCM. The USB port is used for field updates of firmware and to connect to a PC to run Force-Test Software and other DAQ systems.. Later releases may also allow this port to be used to exchange other forms of data and communicate to external PCs for Data Aquisition purposes as ForceTest Software.

Digital Force Gauge (DFG) Port

The DFG Port allows the TCM to receive RS232 signals and allow the tester to stop when a set force limit is reached.

▶ **Configuration 1**

Connection for Stopping and cycling a DFG at a set load Limit.



▶ **Configuration 2**

DFG load limit detection and data communication to PC for ForceTest and DAQs systems.



▶ **Configuration 3**

ForceSetup.com—Utility for future TCM setup capabilities.



Main Power Switch

This switch controls the main power to the TCM. Flip the switch next to the power cord inlet to turn the machine ON or OFF. When the machine is OFF, the speed indicator display is not illuminated.

When first turning the machine OFF, you may note that it takes a few seconds for the speed indicator display to extinguish. This is normal and due to the capacitors' stored power that eventually discharges.

Main Power Fuse

The unit has a ceramic 5 mm x 20 mm 1.5 Amp slow-blow fuse. If for some reason the fuse needs to be replaced, use a fuse with same ratings as indicated.

To replace the fuse, follow these steps. First make sure the Main Power Switch is in the off position. Unplug the power cord from the outlet. Unplug the power cord from the back of the TCM base. Now, using a screwdriver, pry open the fuse cover by inserting the blade of the screwdriver from the side the power cord was in the back of the TCM and pry outward. Remove the old fuse and replace with the new one. Push fuse door back in place, plug the power cord back into the TCM and then the power outlet. Turn on the Main Power Switch and check that the TCM powers up properly by observing the display and indicators on the front panel of the TCM.

IEC Power Cord Connection

The input AC Mains Power requires no selection between 120 and 240 VAC as its power supply can automatically accommodate 100-240 VAC (50-60 Hz) nominal. The appropriate IEC power cord was supplied with the TCM at time of order. To install the power cord, first plug the appropriate power cord into the TCM and then into the power outlet. To remove the power cord, first unplug the power cord from the outlet and then remove the cord from the TCM.

Remote Foot Switch

The TCM Series can be equipped with the optional remote footswitch for controlling the crosshead movement. The Remote Footswitch (p/n NC002910) plugs into the rear of the TCM Series console at the stereo input jack.



! CAUTION: Do not plug the Remote Foot Switch into the console while the crosshead is moving. AMETEK recommends that the power to the TCM Series be Off before connecting the Remote Foot Switch.

▸ Crosshead Direction Control

The right pedal on the Footswitch Controller causes the crosshead to move in an UPWARD direction. Press and hold to move the crosshead. Release the foot pedal to stop the crosshead movement.

The left pedal on the Footswitch Controller causes the crosshead to move in a DOWNWARD direction. Press and hold to move the crosshead. Release the foot pedal to stop the crosshead movement.

Releasing the foot pedal will stop the crosshead from moving.

Note: Make sure power is Off at the TCM Series tester before inserting the remote Footswitch Controller. The Footswitch Controller has an 8 foot (2.5 m) length cable with stereo jack connector. The connector is inserted into the back of the TCM Series console.

EMERGENCY SWITCH

The Emergency switch is the large red button located in the front and on the right side of the base cover, next to the front panel. When this button is depressed, power is removed from the tester.

▶ Activate Emergency Stop

To activate the emergency stop button, press firmly in a downward direction. The stop button will latch and lock into position.

▶ Release the Emergency Button

Power is returned to the tester when the emergency stop button is released to the UP position.

To release the emergency stop button, first switch machine power OFF from the main power entry on the back, then press firmly down on the stop button and turn in a clockwise direction. This will disengage the lock and return the emergency stop button to its normal position.

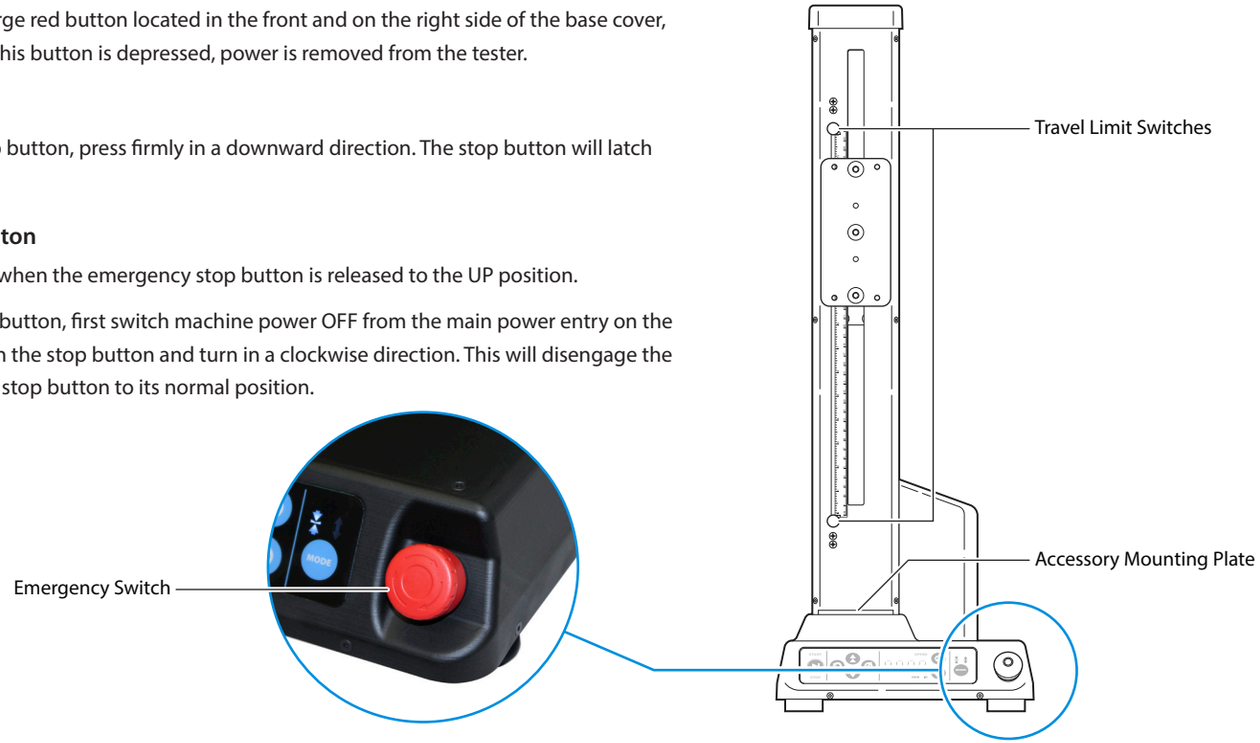

FAULT AND ERROR CODES

The TCM can detect and display several types of faults and errors. These error codes will be displayed on the same display that indicates the crosshead speed. If one of the faults or errors are detected, the display will display only the fault/error code and no longer indicate the crosshead speed.

Also, if in fault or error state, three (3) quick audible beeps will sound followed by a 3 second delay and then sound again in a repeating cycle until power is turned off to the TCM and the fault condition is no longer present (except where noted). Below is a list of the faults and error codes:

Display Indication	Fault / Error Descripiton
FE	Firmware (due to hardware) error.
LOAD *	Machine detected an overload and will log it.
STAL	Motor was detected as being stalled.
HOT	Electronics or motor is too hot.
FATL	Fatal system error. This can include motor issues, setup issues, etc.
LSF	Limit switch fault. Both upper & lower limit switches are ON.

*A power recycle is not needed. You will only be able to drive the opposite direction of the overload or stall event.

SECURING THE TCM TO A WORKBENCH

The TCM Series Motorized Test Stand is a heavy piece of equipment and cannot normally tip over. However, if there is the possibility that users can pull against the vertical column, then there is a risk that the machine may be pulled over.

It is required that the TCM be secured to a workbench using the two (2) tapped holes in the base of the machine. The template below shows the location of of the two holes, and can serve as a guide for drilling two holes in the workbench to receive the two M8 mounting bolts.

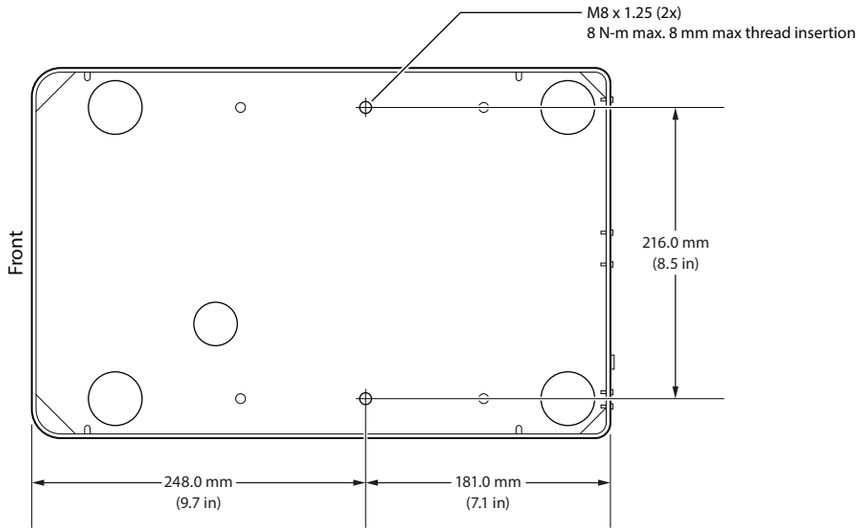

The TCM Series includes two (2) mounting bolts, two spacers and two washers as part of the standard mounting kit. If the supplied mounting bolts are the wrong length for your workbench, they may be substitueted with standard M8 bolts of the proper length.

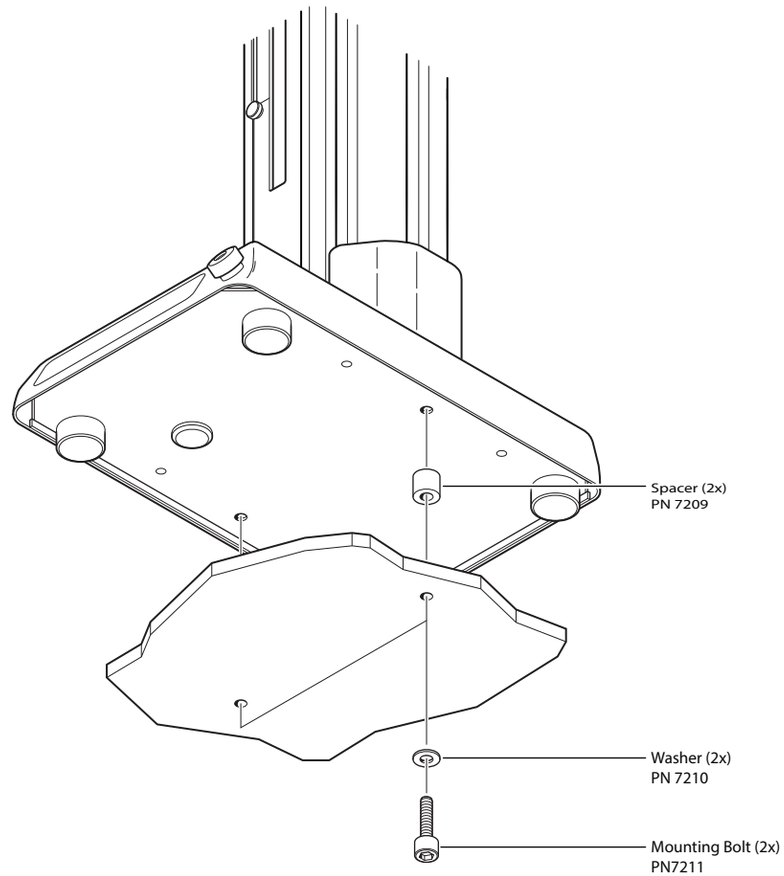

Specifications

Load Capacity

TCM100 ..... 100 lbf (500 N)

TCM350 ..... 350 lbf (1500 N)

Travel

Standard ..... 16 inches (~406 mm)

Extended ..... 32 inches (~812 mm)

Speed

▶ **Speed Range**

0.2 to 40.0 inches per minute (5 to 1016 millimeters per minute)

▶ **Speed Accuracy**

± 0.1% of Set Speed (unloaded)

Frame Deflection

TCM100 ..... Less than 1 mm (0.04") at full load capacity

TCM350 ..... Less than 2 mm (0.06") at full load capacity

Measurement System

Chatillon DF Series Digital Force Gauge

Temperature

▶ **Operating Temperature**

50 to 104° F (10 to 40° C)

Input Power

85-264 VAC at 47-63 Hz

Current ..... 1 Amp Maximum

Relative Humidity

20 to 85% (non-condensing)

Weight

▶ **Tester Weight**

Standard ..... 57 lbs (25.9 kg) approximate

Extended ..... 69 lbs (31.3 kg) approximate

▶ **Shipping Weight**

Standard ..... 197 lbs (90 kg)

Extended ..... 209 lbs (94 kg)

Part Numbering System

Model/Force	Crosshead Travel Height	Power	Mounting
———	———	———	———
100 lbf / 500 N **TCM100**	Standard 16" ..... **S**	115 VAC 60 Hz, US Power Cord. ..... **-115**	1/2-20F thread in base and 1/2-20M to 5/16-18M and 1/2-20M to 10-32M Couplings ... **-A**
350 lbf / 1500 N ... **TCM350**	Extended 32" ..... **E**	230 VAC 50 Hz, UK and EU Power Cord ..... **-230**	1/2-20F thread in base and 5/8" Eye End Adapter Kit for base and DFG ..... **-B**
		230 VAC 50 Hz, China & Australia Power Cord ... **-230CNAU**	

SAMPLE PART NUMBERS

TCM100S-115-A ..... 100 lbf/400 N unit with standard 16" crosshead travel height, 115 VAC 60 Hz US power cord, 1/2-20F thread in base and 1/2-20M to 5/16-18M and 1/2-20M to 10-32M couplings.

TCM350E-230-B ..... 350 lbf/1500 N unit with extended 32" crosshead travel height, 230 VAC 50 Hz UK and EU power cord, 1/2-20F thread in base, and 5/8" Eye End Adapters for the base and DFG.

TCM DIMENSIONS

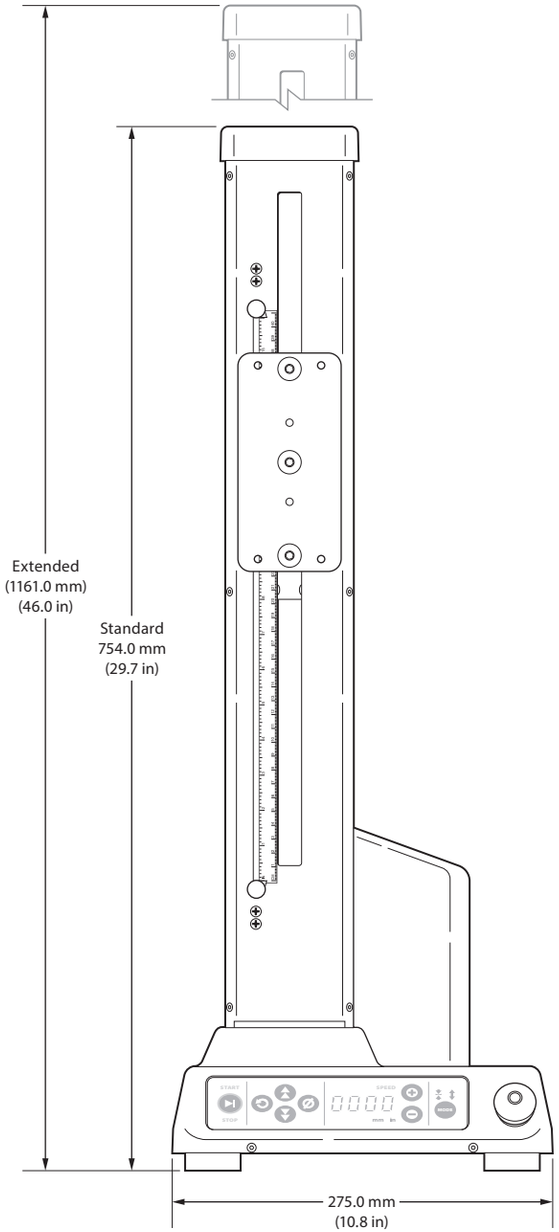

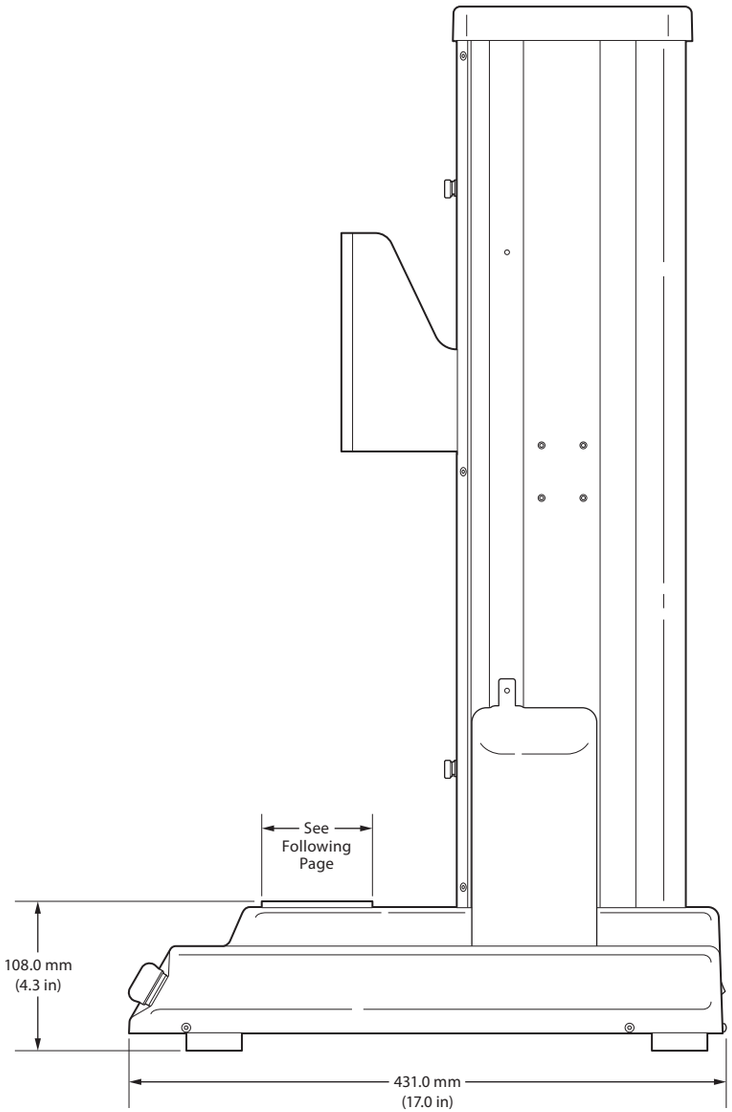

TCM MOUNTING PLATE OPTIONS

Standard Mounting Plate

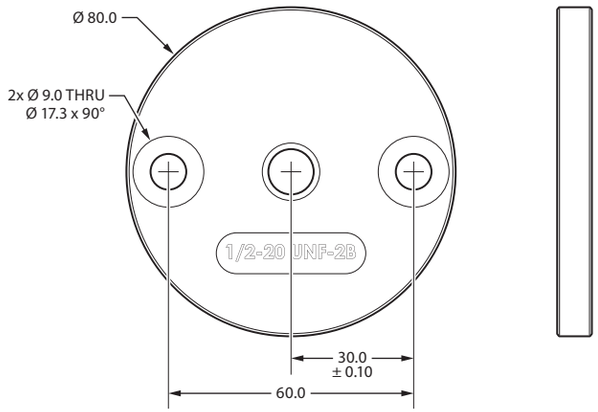

Optional Multi-Thread Plate Kit (p/n SPK-TCM-005)

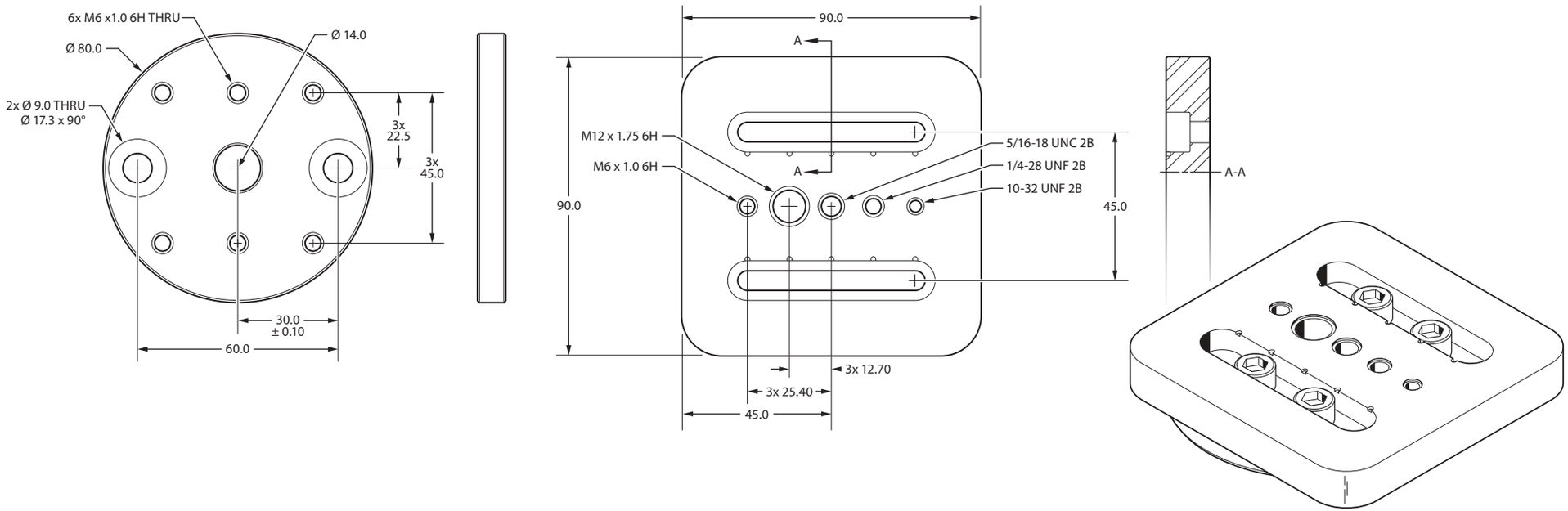

Support

OPTIONAL ACCESSORIES

Description	Part Number	Qty
Multi-thread Plate Kit	SPK-TCM-005	1
T-Slot Table	SPK-TCM-011	1
Foot Switch	NC002910	1
Splinter Shield	SPK-TCM-012	1
Remote Load Cell Adapter Kit	SPK-TCM-014	1
3" Compression Platen	**SPK-TCM-013**	—
3" Platen	17012	1
5/16-18M #10-32F	P-10020	1

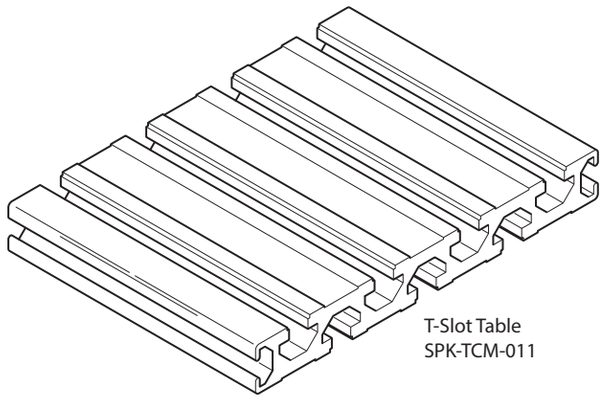

T-Slot Table
SPK-TCM-011

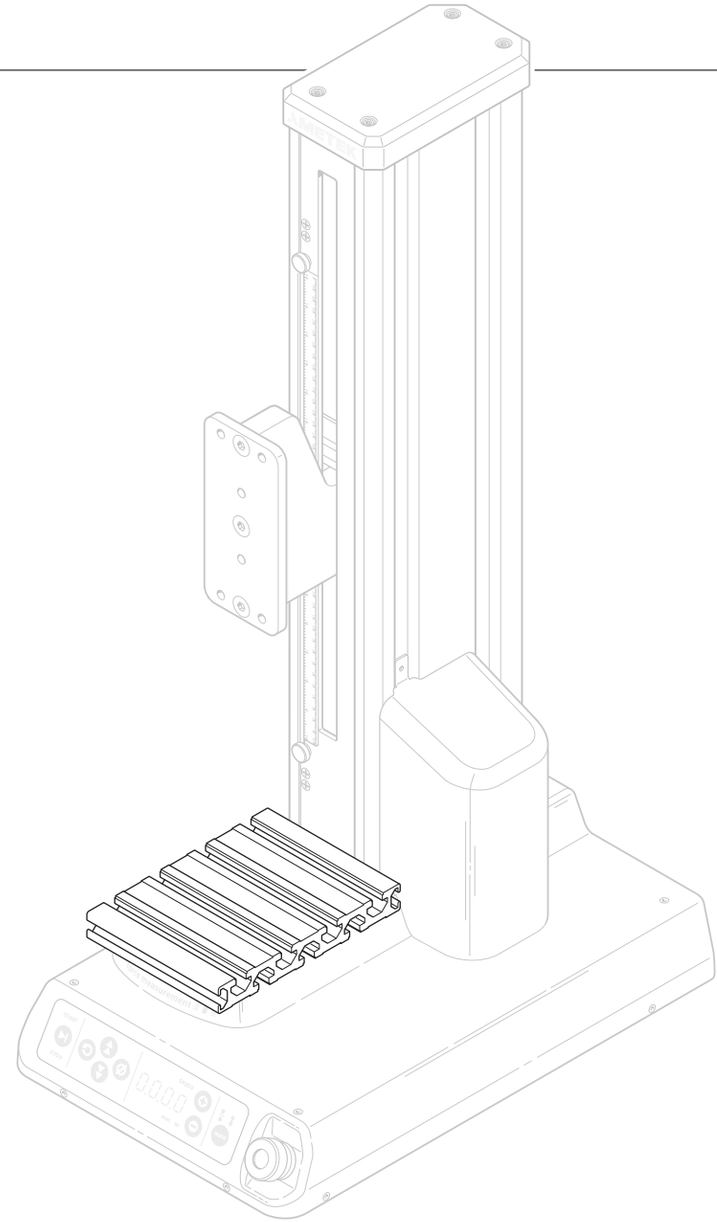

CONTACT US

United Kingdom
Tel +44 (0)1243 833 370
test.sales@ametek.com

France
Tel +33 (0)1 30 68 89 40
general.lloyd-instruments@ametek.com

Germany
Tel +49 (0)2159 9136 510
info.mct-de@ametek.de

Denmark
Tel +45 4816 8000
test.sales@ametek.com

USA
Florida
Tel +1 (800) 527 9999
test.sales@ametek.com

India
Tel +91 22 2836 4750
test.sales@ametek.com

China
Shanghai
Tel +86 21 5868 5111

Beijing
Tel +86 10 8526 2111-19
test.sales@ametek.com

Singapore
Tel +65 6484 2388
test.sales@ametek.com

RETURNING PRODUCT TO AMETEK

Please contact your sales representative to complete a Return Material Authorization (RMA) form and/or receive an RMA number.
Return/shipping instructions will be provided with the RMA number.

WARRANTY

This instrument is warranted against defects in workmanship, material and design for two (2) years from date of delivery to the extent that AMETEK will, at its sole option, repair or replace the instrument or any part thereof which is defective, provided, however, that this warranty shall not apply to instruments subjected to tampering or, abuse, or exposed to highly corrosive conditions.

THIS WARRANTY IS IN LIEU OF ALL OTHER WARRANTIES WHETHER EXPRESS OR IMPLIED AND AMETEK HEREBY DISCLAIMS ALL OTHER WARRANTIES, INCLUDING, WITHOUT LIMITATION, ANY WARRANTY OF FITNESS FOR A PARTICULAR PURPOSE OR MERCHANTABILITY. AMETEK SHALL NOT BE LIABLE FOR ANY INCIDENTAL OR CONSEQUENTIAL DAMAGES, INCLUDING, BUT NOT LIMITED TO, ANY ANTICIPATED OR LOST PROFITS.

This warranty is voidable if the purchaser fails to follow any and all instructions, warnings or cautions in the instrument's Operation Manual.

If a manufacturing defect is found, AMETEK will replace or repair the instrument or replace any defective part thereof without charge; however, AMETEK's obligation hereunder does not include the cost of transportation, which must be borne by the customer. AMETEK assumes no responsibility for damage in transit, and any claims for such damage should be presented to the carrier by the purchaser.

AMETEK®

SENSORS, TEST & CALIBRATION

© 2020 AMETEK Incorporated

6576.C 2002