Chatillon®
8200 Series Hanging Scales

The CHATILLON® 8200 Series hanging scale are crafted of chrome-plates steel with machines stainless steel pinions and a phosphor bronze rack combination for virtually frictionless performance. The 13-inch double dial reaches full capacity in three revolutions. Runners are indexed for each revolution. Brass air dashpots eliminate pointer oscillation.

The 8200 Series may be specified as a Class III "Legal for Trade" scale. Available in avoirdupois and metric models, the 8200 Series can be supplied with a bottom hook (nickel plated steel) or the popular AS circular pan. The AS Pan is constructed of stainless steel. The supporting ring and bow are of nickel plated steel. The removable 5-inch deep round pan has drain holes and is USDA approved for use in general food handling.

Features

- H44 Class III "Legal for Trade"
- Avoirdupois and Metric Graduations
- Full Capacity in Three Pointer Revolutions
- Double 13-inch Dials (Glass Covered)
- Bottom Hook or AS Attachments
- 1 Year Warranty

Specifications

Accuracy: See Table
Maximum Overload: 120% of Rated Capacity
Tare Capacity: 10% Full Scale Capacity
Weight with Hook: 14 lbs (6.4 kg)
Weight with AS Pan: 18 lbs (8.2 kg)



Shown with bottom hook



Shown with optional AS Pan

Accuracies - Class IIII

Model	Resolution	Range	Scale Divisions	Tolerance Division	Tolerance Weight	%Accurate
8230DD-S	30 lb x 1 oz	0 - 3 lb	0 - 50	±1/2 d	±0.5 oz	±0.10%
		4 - 12 lb	51 - 200	±1 d	±1 oz	±0.21%
		13 - 20 lb	201 - 400	±1-1/2 d	±1/5 oz	±0.31%
		21 - 30 lb	400 +	±2-1/2 oz	±2.5 oz	±0.52%
8260DD-S	60 lb x 2 oz	0 - 6 lb	0 - 50	±1/2 d	±0.5 oz	±0.05%
		7 - 24 lb	51 - 200	±1 d	±1 oz	±0.10%
		25 - 40 lb	201 - 400	±1-1/2 d	±1/5 oz	±0.16%
		41 - 60 lb	400 +	±2-1/2 oz	±2.5 oz	±0.26%
K8215DD-S	15 kg x 20 g	0 - 1 kg	0 - 50	±1/2 d	±10 g	±0.07%
		2 - 4 kg	51 - 200	±1 d	±20 g	±0.13%
		5 - 8 kg	201 - 400	±1-1/2 d	±30 g	±0.20%
		9 - 15 kg	400 +	±2-1/2 oz	±50 g	±0.33%
K8230DD-S	30 kg x 50 g	0 - 2 kg	0 - 50	±1/2 d	±25 g	±0.08%
		3 - 10 kg	51 - 200	±1 d	±50 g	±0.17%
		11 - 20 kg	201 - 400	±1-1/2 d	±75 g	±0.25%
		21 - 30 kg	400 +	±2-1/2 oz	±120 g	±0.42%

Accuracies - Class III "Legal for Trade"

Model	Resolution	Range	Scale Divisions	Tolerance Division	Tolerance Weight	%Accurate
8230DD-T	30 lb x 1/2 oz	0 - 15 lb	0 - 500	±1/2 d	±0.25oz	±0.05%
		16 - 30 lb	501 - 2000	±1 d	±0.5 oz	±0.05%
8260DD-T	60 lb x 1 oz	0 - 31 lb	0 - 500	±1/2 d	±0.5 oz	±0.05%
		32 - 60 lb	501- 2000	±1 d	±1 oz	±0.10%
K8215DD-T	15 kg x 20 g	0 - 10 kg	0 - 500	±1/2 d	±10 g	±0.07%
		11 - 15 kg	501 - 2000	±1 d	±20 g	±0.13%

These accuracies and tolerances are based on Handbook 44 Guidelines.

Certificate of Conformance No. 88-060, Model 0028/A was issued under the national Type Evaluation Program of the National Conference on Weights and Measures, that the design conforms to NIST Handbook 44 Class III. The scale is "Legal for Trade" subject to on-site verification by the local Weights and Measures jurisdictions.

Chatillon precision weighing
AMETEK

Dimensions

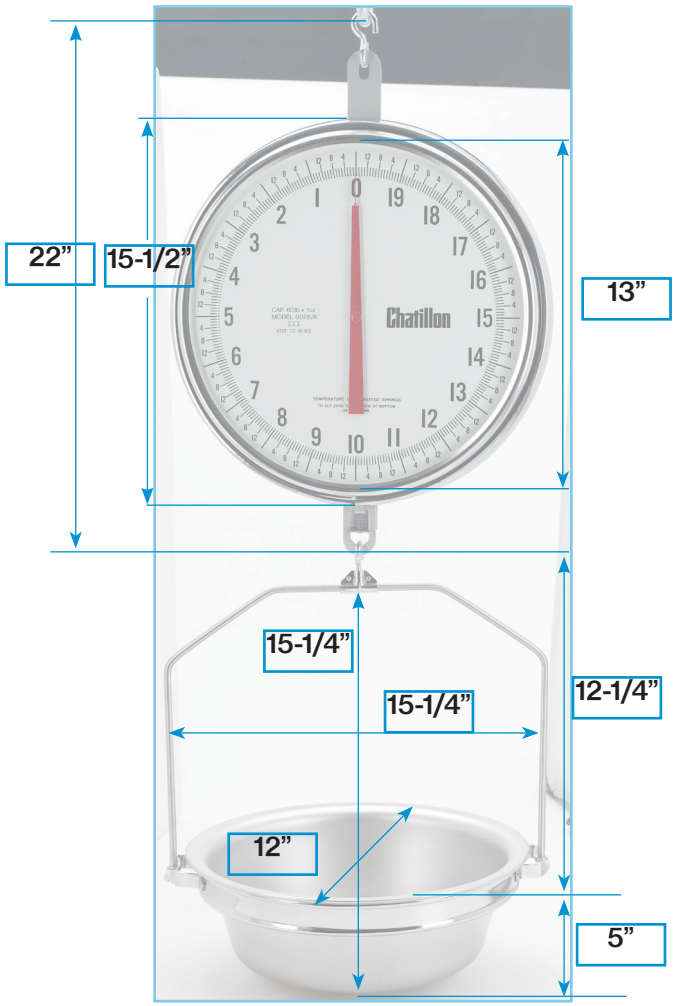

Accessories

Part No.	Description
5854	Bottom Hook
SPK-SCALE-AS	AS Pan Assembly (4 lbs)
7436-1	AS Pan Only
16097	Bow, for AS Pan
16098	Ring, for AS Pan

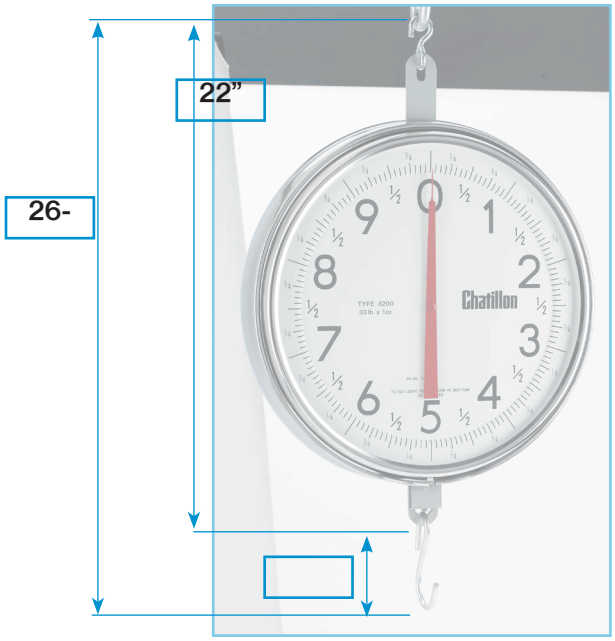

Ordering

H44 Class III “Legal for Trade”

Old Model	New Model	Capacity	Dial	Attachment
0628HDD	8230DD-T-H	30 lb x 1/2 oz	Double	Bottom Hook
5628ASDD	8230DD-T-AS	30 lb x 1/2 oz	Double	AS Pan
0728HDD	8260DD-T-H	60 lb x 1 oz	Double	Bottom Hook
5728ASDD	8260DD-T-AS	60 lb x 1 oz	Double	AS Pan
K0628HDD	K8215DD-T-H	15 kg x 20 g	Double	Bottom Hook
K5628ASDD	K8215DD-T-AS	15 kg x 20 g	Double	AS Pan

Certificate of Conformance No. 88-060, Model 0028/A was issued under the national Type Evaluation Program of the National Conference on Weights and Measures, that the design conforms to NIST Handbook 44 Class III. The scale is “Legal for Trade” subject to on-site verification by the local Weights and Measures jurisdictions.

H44 Class IIII “Not Legal for Trade”

Old Model	New Model	Capacity	Dial	Attachment
8230HDD	8230DD-S-H	30 lb x 1 oz	Double	Bottom Hook
8230ASDD	8230DD-S-AS	30 lb x 1 oz	Double	AS Pan
8260HDD	8260DD-S-H	60 lb x 1 oz	Double	Bottom Hook
8260ASDD	8260DD-S-AS	60 lb x 1 oz	Double	AS Pan
8215KGHDD	K8215DD-S-H	15 kg x 20 g	Double	Bottom Hook
8215KGASDD	K8215DD-S-AS	15 kg x 20 g	Double	AS Pan
8230KGHDD	K8230DD-S-H	30 kg x 50 g	Double	Bottom Hook
8230KHASDD	K8230DD-S-AS	30 kg x 50 g	Double	Bottom Hook

UK
Tel +44 (0)1243 833 370
uk-far.general@ametek.co.uk

France
Tel +33 (0)1 30 68 89 40
general.lloyd-instruments@ametek.fr

Germany
Tel +49 (0)2159 9136 510
info.mct-de@ametek.de

Denmark
Tel +45 4816 8000
ametekdk@ametek.com

USA
Florida
Tel +1 (727) 538 6000
chatillon.fl-lar@ametek.com

California
Tel +1 (800) 444 1850
sales@crystalengineering.net

India
Tel +91 22 2836 4750
ametekdk@ametek.com

Singapore
Tel +65 6484 2388
ametekdk@ametek.com

China
Shanghai
Tel +86 21 5868 5111

Beijing
Tel +86 10 8526 2111

Guangzhou
Tel +86 20 8363 4768
lloyd@ametek.com.cn

Information in this document is subject to change without notice. ©2014 by AMETEK, Inc., www.ametek.com. All rights reserved.

Chatillon precision weighing
AMETEK