Chatillon®
BP13 Series Bench Scales

Specification Sheet
SS-BP13-1123
November 2023

The CHATILLON® BP13 Series bench platform scale features a large, easy-to-read 13-inch (330 mm) dial with knife-edge pointer for accurate measurements. Scales are suitable for H44 Class III "Legal for Trade" applications. Designed for platform use, the BP13 features a rugged cast-iron base with heavy-gauge steel platform for excellent stability. The scale's mounting feet are adjustable. Options include a stainless steel platform, 7-inch (178 mm) deep provisional pan and quick tare knob. Tare adjustments may be made up to 10% of rated capacity. The scale's head cover and column back are removable for easy access to the dial mechanism and the dashpot. Units are shipped assembled.

Features

- H44 Class III "Legal for Trade"
- Avoirdupois and Metric Dials
- 13-inch (330mm) Reading Dial with Knife-edge Pointer
- Full Scale in 1 Revolution
- Rugged Cast Iron Base, Heavy-gauge Steel Construction
- 1 Year Warranty

Specifications

Accuracy: See Ordering
Safe Overload: 120% of rated capacity
Ultimate Overload: 125% of Rated Capacity
Display: Single Reading
Operating Temperature: 45° to 104°F (7° to 40°C)
Storage Temperature: -4° to 104°F (-20° to 40°C)
Instrument Weights: 100 lbs (45 kg)
Shipping Weight: 120 lbs (55 kg)

Note: Weights are approximate.



BP13 Series with optional Provision Pan (23019)

175th ANNIVERSARY 1835 2010 Chatillon

Quality Assured.

Chatillon precision weighing
AMETEK

Ordering

Accuracies - Class III "Legal for Trade"

Model	Resolution	Range	Scale Divisions	Tolerance Division	Tolerance Weight	%Accurate
BP13-065-T	65 lb x 2 oz	0 - 62 lb	0 - 500	±1/2 d	±1 oz	±0.10%
		63 - 65 lb	501 - 2000	±1 d	±2 oz	±0.19%
BP13-130-T	130 lb x 4 oz	0 - 125 lb	0 - 500	±1/2 d	±2 oz	±0.10%
		126 - 130 lb	501 - 2000	±1 d	±4 oz	±0.19%
BP13-520-T	520 lb x 1 lb	0 - 500 lb	0 - 500	±1/2 d	±1/2 lb	±0.10%
		501 - 520 lb	501 - 2000	±1 d	±1 lb	±0.19%

Accuracies - No Class

Model	Resolution	Range	Scale Divisions	Tolerance Division	Tolerance Weight	%Accurate
BP13-025K-T	25 kg x 50 g	0 - 25 kg	0 - 500	±1/2 d	±25 g	±0.10%
			501 - 2000	±1 d	±50 g	±0.20%
BP13-050K-T	50 kg x 100 g	0 - 50 kg	0 - 500	±1/2 d	±50 g	±0.10%
			501 - 2000	±1 d	±100 g	±0.20%
BP13-200K-T	200 kg x 500 g	0 - 200 kg	0 - 500	±1/2 d	±250 g	±0.13%
			501 - 2000	±1 d	±500 g	±0.25%

Certificate of Conformance No. 88-096A1, Model 13/A and Type 15, was issued under the national Type Evaluation Program of the National Conference on Weights and Measures, that the design conforms to NIST Handbook 44 Class III. The scale is "Legal for Trade" subject to on-site verification by the local Weights and Measures jurisdictions.

Class IIII models meet all requirements of NIST Handbook 44 Class IIII. Usage of Class IIII scales in trade is limited to certain transactions. Consult your local Office of Weights and Measures for clarification.

Accessories

Part No.	Description
12130-3	Quick Tare Knob
16012	Stainless Steel Platform Cover
23019	Stainless Steel Provision Pan
16005-A	Damping Oil (65 lb, 130 lb, 25 kg, 50 kg)
16005-B	Damping Oil (260 lb, 520 lb, 100 kg, 200 kg)

Notes:
The provision pan weighs approximately 10 lbs. Scales with capacities less than 100 lbs must be back-started.

The Quick Tare Knob cannot be used on Legal for Trade applications.

Dimensions

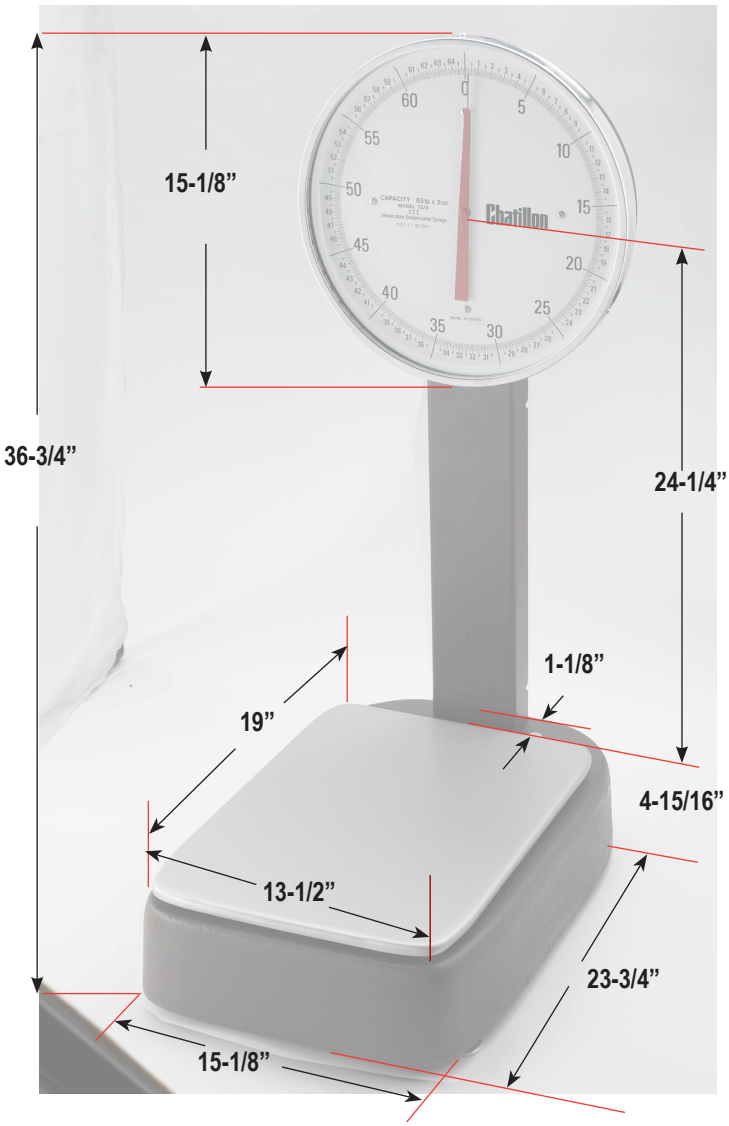

AMETEK®
SENSORS, TEST & CALIBRATION

For the authorized Chatillon Distributor or Manufacturer's Representative near you, go to www.chatillon.com

Americas
AMETEK
Measurement & Calibration
Technologies
8600 Somerset Drive
Largo, Florida 33773
United States of America
Tel +1-727-536-7831
Tel +1-800-527-9999
Fax +1-727-539-6882
Email chatillon.fl-lar@ametek.com

United Kingdom
Lloyd Instruments Ltd.
Steyning Way
Bognor Regis
West Sussex
PO22 9ST
United Kingdom
Tel +44 (0) 1243 833 370
Fax +44 (0) 1243 833 401
Email uk-far.general@ametek.co.uk

France
AMETEK S.A.S.
Rond Point de l'Epine des Champs
Buro Plus - Bat. D
78990 Elancourt
France
Tel +33 (0)1 30 68 89 40
Fax +33 (0)1 30 68 89 49
Email general@lloyd-instruments.com

Germany
AMETEK GmbH
Rudolf-Diesel-Strasse 16
D-40670 Meerbusch
Germany
Tel +49 (0) 2159 9136-70
Fax +49 (0) 2159 9136-39
Email info@ametek.de

Singapore
AMETEK Singapore Pvt. Ltd.
10 Ang Mo Kio Street 65
#05-12 Techpoint
Singapore 569059
Tel +65-6484-2388
Fax +65-6481-6588
Email aspl@ametek.com.sg

Visit Us on the Worldwide Web at:
www.chatillon.com

© 2010 by AMETEK, Inc.
Information within this document is subject to change without notice.

ISO 9001/2000
ISO/IEC17025
Manufacturer