ANDERSEN CORPORATION

E-SERIES HINGED PATIO DOOR - OUTSWING (WZ3) (IMPACT)

GENERAL NOTES:

1. THE PRODUCT SHOWN HEREIN IS DESIGNED AND MANUFACTURED TO COMPLY WITH THE CURRENT FLORIDA BUILDING CODE (FBC), **EXCLUDING** HVHZ AND HAS BEEN EVALUATED ACCORDING TO THE FOLLOWING:
   - TAS 201-94
   - TAS 202-94
   - TAS 203-94
   - ASTM E1886-05
   - ASTM E1996-05

2. ADEQUACY OF THE EXISTING STRUCTURAL CONCRETE/MASONRY, 2X AND METAL STUD FRAMING AS A MAIN WIND FORCE RESISTING SYSTEM CAPABLE OF WITHSTANDING AND TRANSFERRING APPLIED PRODUCT LOADS TO THE FOUNDATION IS THE RESPONSIBILITY OF THE ENGINEER OR ARCHITECT OF RECORD FOR THE PROJECT OF INSTALLATION.

3. 1X AND 2X BUCKS (WHEN USED) SHALL BE DESIGNED AND ANCHORED TO PROPERLY TRANSFER ALL LOADS TO THE STRUCTURE. BUCK DESIGN AND INSTALLATION IS THE RESPONSIBILITY OF THE ENGINEER OR ARCHITECT OF RECORD FOR THE PROJECT OF INSTALLATION.

4. THE INSTALLATION DETAILS DESCRIBED HEREIN ARE GENERIC AND MAY NOT REFLECT ACTUAL CONDITIONS FOR A SPECIFIC SITE. IF SITE CONDITIONS CAUSE INSTALLATION TO DEVIATE FROM THE REQUIREMENTS DETAILED HEREIN, A LICENSED ENGINEER OR ARCHITECT SHALL PREPARE SITE SPECIFIC DOCUMENTS FOR USE WITH THIS DOCUMENT.

5. APPROVED IMPACT PROTECTIVE SYSTEM **IS NOT REQUIRED** TO PROTECT THIS PRODUCT IN AREAS REQUIRING IMPACT RESISTANCE IN WIND ZONE 3 OR LESS.

6. APPROVED IMPACT PROTECTIVE SYSTEM **IS REQUIRED** TO PROTECT THIS PRODUCT IN AREAS REQUIRING IMPACT RESISTANCE IN WIND ZONE 4.

7. DOOR FRAME MATERIAL, CLADDING : *ALUMINUM*
   WOOD: PONDEROSA PINE

8. MULLION MATERIAL: *LAMINATED VENEER LUMBER.*

9. GLASS MEETS THE REQUIREMENTS OF ASTM E1300. SEE SHEET *1* FOR GLAZING DETAILS.

10. *DESIGNATIONS "X" AND "O" STAND FOR THE FOLLOWING:*
    X: OPERABLE PANEL
    O: FIXED PANEL

11. CUSTOM SIZES AVAILABLE UPON REQUEST. CUSTOM DESIGN PRESSURE WILL BE ASSIGNED EQUAL TO NEXT LARGER STANDARD SIZE.

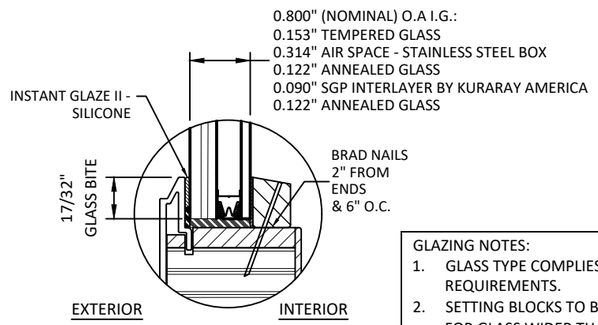

GLAZING DETAIL - G1

SHOWN WITH CONTEMPORARY GLASS STOP

GLAZING NOTES:
1. GLASS TYPE COMPLIES WITH ASTM E1300 REQUIREMENTS.
2. SETTING BLOCKS TO BE LOCATED AT 1/4 SPAN LENGTH FOR GLASS WIDER THAN 36" AS PER FBC CHAPTER 24.
3. SETTING BLOCK DUROMETER HARDNESS OF 70-90 (SHORE A) AS REFERENCED IN FBC CHAPTER 24.
4. GLASS TYPE SHALL COMPLY WITH APPLICABLE GLAZING REQUIREMENTS PER CHAPTER 24 OF THE FBC

GLASS STOP PROFILES ARE INTERCHANGEABLE

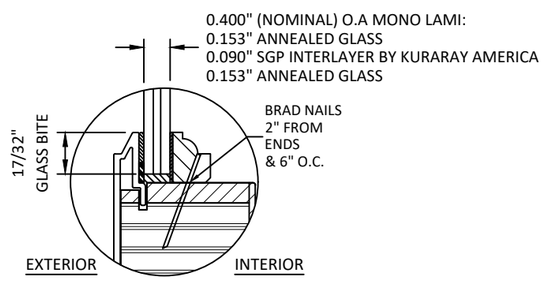

GLAZING DETAIL - G2

SHOWN WITH COLONIAL GLASS STOP

TABLE OF CONTENTS

SECTION	REVISION	SHEET DESCRIPTION
1.0	C	GENERAL NOTES & GLAZING DETAILS
2.0	C	ELEVATIONS AND CONFIGURATION
3.0	C	VERTICAL SECTIONS
4.0	C	HORIZONTAL SECTIONS
5.0	C	PANELS & SIDELITES DETAILS
6.0	C	HARDWARE LOCATIONS
7.0	C	ANCHOR LAYOUT
8.0	C	ANCHOR DETAILS, SCHEDULE & NOTES
9.0	C	MULLION TABLES

Andersen AW WINDOWS • DOORS
100 FOURTH AVE. NORTH
BAYPORT, MN 55003-1096
PH: (651) 264-5150 FX: (651) 264-5485

TITLE: *E-SERIES HINGED PATIO DOOR - OUTSWING (WZ3)(IMPACT)*
GENERAL NOTES & GLAZING DETAILS

PREPARED BY:
BUILDING DROPS, INC.
398 E. DANIA BEACH BLVD., STE. 338
DANIA BEACH, FL 33004
PH: (954)399-8478
FAX: (954)744.4738
WEB: www.buildingdrops.com

REMARKS	BY	DATE
FBC 17TH EDITION UPDATE	HR	7.2.18
ADDED ZERO, $\frac{1}{2}$", & 1" MULL	HR	4.12.19
ADDED 3/4" X 5-3/16" MULL & DP CHARTS	LL	8.2.19

THE INSTALLATION DETAILS DESCRIBED HEREIN ARE GENERIC AND MAY NOT REFLECT ACTUAL CONDITIONS FOR A SPECIFIC SITE. IF SITE CONDITIONS CAUSE INSTALLATION TO DEVIATE FROM THE REQUIREMENTS DETAILED HEREIN, A LICENSED ENGINEER OR ARCHITECT SHALL PREPARE SITE SPECIFIC DOCUMENTS FOR USE WITH THIS DOCUMENT.

Digitally signed by Hermes F Norero
Reason: I am approving this document
Date: 2019.08.16 20:29:27 -04'00'

HERMES F. NORERO LICENSE No. 73778 STATE OF FLORIDA PROFESSIONAL ENGINEER

HERMES F. NORERO, P.E.
FLORIDA P.E. No 73778
BUILDING DROPS, INC
398 E. DANIA BEACH BLVD. # 338
DANIA BEACH, FL 33004
FBPE CERT. OF AUTHORIZATION No. 29578

FL #: FL25570

DATE: 10.02.17

DWG. BY: HR | CHK. BY: HFN

SCALE: NTS

DWG. #: AWD231

SECTION 1.0

8/14/2019 6:50 PM
s:\projects\andersen windows\fbc-19-0548.2 - fbc submittal - e-series mullion revisions\dwgs\fl25570.1, .2, .3 & .4\awd231 - fl15254.1-impact - non hvhz new format.dwg

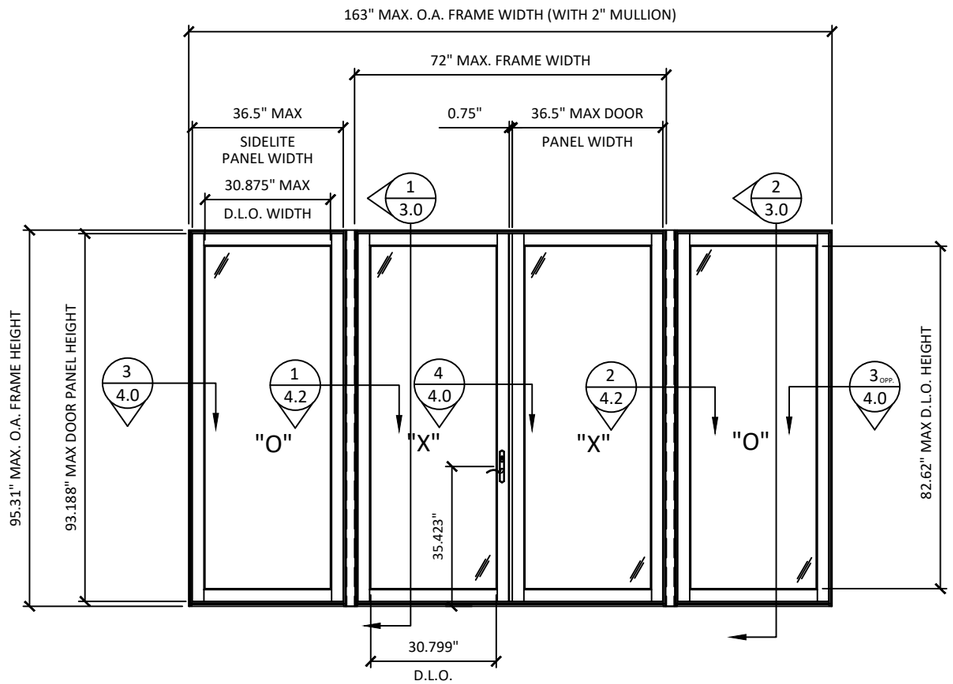

ELEVATION

OUTSWING DOOR WITH 2" MULLION

CONFIGURATION	WIDTH	HEIGHT	GLAZING TYPE	PANEL TYPE	PG RATING	STRUCTURAL DESIGN PRESSURE
X OR O	36.50	95.31	G1	SP1, SP2, SP1R1, SP1R2, SP2R3, SP1M1, SP1M2, SP2M1, SP2M2, SP2M3, SL1, SL2, SL1R1, SL1R2, SL2R3, SL1M1, SL1M2, SL2M1, SL2M2, SL2M3	PG 65	+/-65
			G2		PG 65	+65/-75
XX	72.06	95.31	G1 OR G2	SP1, SP2,SP1R1, SP1R2, SP2R3, SP1M1, SP1M2, SP2M1, SP2M2, SP2M3	PG 65	+/-65
O	72.06	36.00	G1	ST1, ST2, ST3, ST4, ST5	PG 65	+/-65
			G2		PG 60	+60/-65

NOTE:

1. REFER TO SECTION 9 FOR DESIGN PRESSURES BASED ON CORRESPONDING MULLION TYPES.

OTHER QUALIFIED CONFIGURATIONS

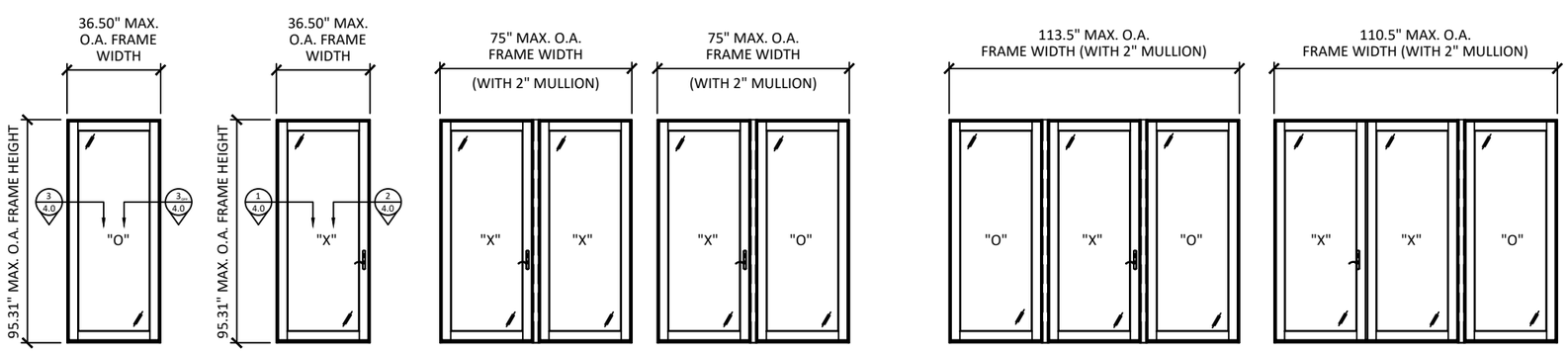

Andersen AW WINDOWS • DOORS
100 FOURTH AVE. NORTH
BAYPORT, MN 55003-1096
PH: (651) 264-5150 FX: (651) 264-5485

TITLE: *E-SERIES HINGED PATIO DOOR - OUTSWING (WZ3)(IMPACT)*

ELEVATIONS & CONFIGURATIONS

PREPARED BY:
BUILDING DROPS, INC.
398 E. DANIA BEACH BLVD., STE. 338
DANIA BEACH, FL 33004
PH: (954)399-8478
FAX: (954)744.4738
WEB: www.buildingdrops.com

REMARKS	BY	DATE
FBC 17TH EDITION UPDATE	HR	7.2.18
ADDED ZERO, $\frac{1}{2}$", & 1" MULL	HR	4.12.19
ADDED 3/4" X 5-3/16" MULL & DP CHARTS	LL	8.2.19

THE INSTALLATION DETAILS DESCRIBED HEREIN ARE GENERIC AND MAY NOT REFLECT ACTUAL CONDITIONS FOR A SPECIFIC SITE. IF SITE CONDITIONS CAUSE INSTALLATION TO DEVIATE FROM THE REQUIREMENTS DETAILED HEREIN, A LICENSED ENGINEER OR ARCHITECT SHALL PREPARE SITE SPECIFIC DOCUMENTS FOR USE WITH THIS DOCUMENT.

HERMES F. NORERO LICENSE No. 73778 STATE OF FLORIDA PROFESSIONAL ENGINEER

HERMES F. NORERO, P.E.
FLORIDA P.E. No 73778
BUILDING DROPS, INC
398 E. DANIA BEACH BLVD. # 338
DANIA BEACH, FL 33004
FBPE CERT. OF AUTHORIZATION No. 29578

FL #: FL25570

DATE: 10.02.17

DWG. BY: HR

CHK. BY: HFN

SCALE: NTS

DWG. #: AWD231

SECTION 2.0

8/14/2019 6:50 PM
s:\projects\andersen windows\fbc-19-0548.2 - fbc submittal - e-series mullion revisions\dwgs\fl25570.1, 2, 3, & 4\awd231 - fl15254.1-impact - non hvhz new format.dwg

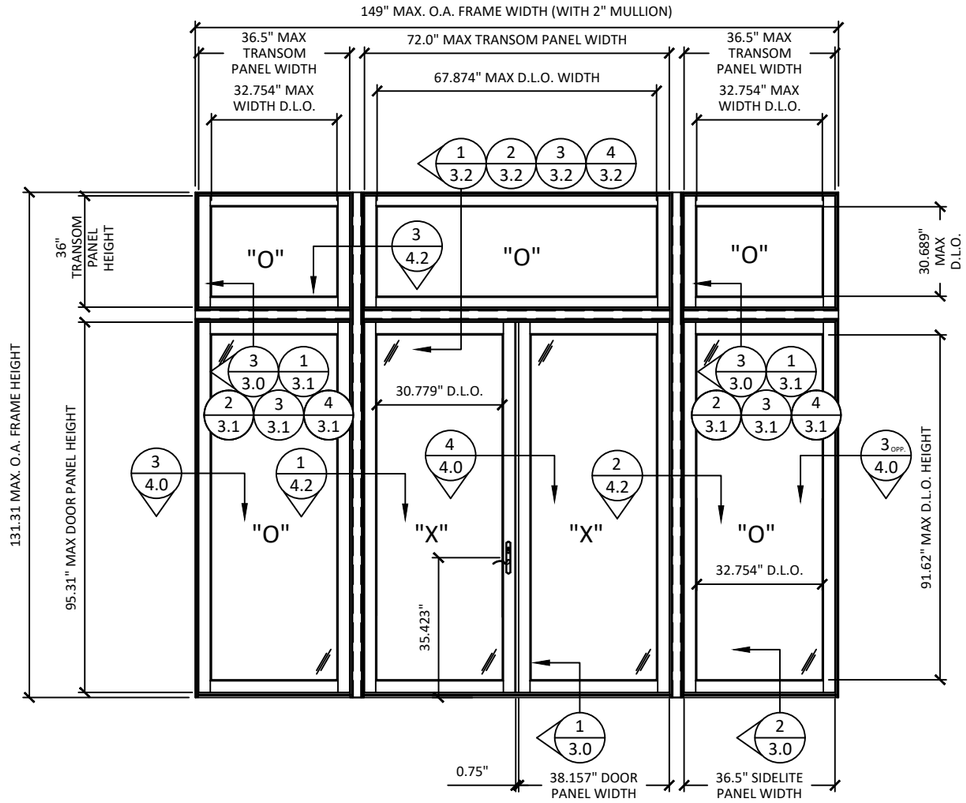

ELEVATION

OUTSWING DOOR WITH TRANSOM & 2" MULLION

NOTES:
1. REFER TO SHEET 2 & SECTION 9 FOR CONFIGURATIONS, PANEL TYPES & DESIGN PRESSURES BASED ON CORRESPONDING MULLION TYPES.

OTHER QUALIFIED CONFIGURATIONS

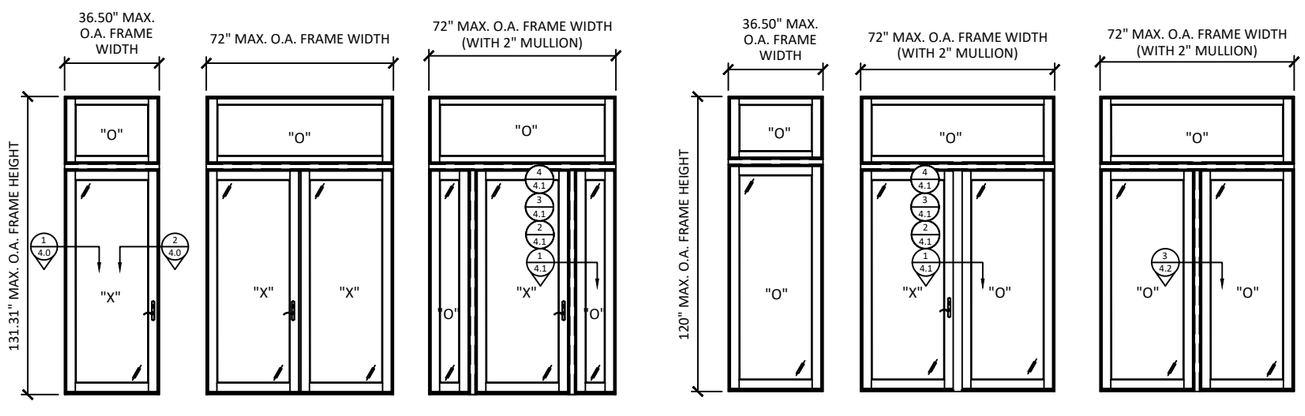

Andersen AW WINDOWS • DOORS
100 FOURTH AVE. NORTH
BAYPORT, MN 55003-1096
PH: (651) 264-5150 FX: (651) 264-5485

TITLE: *E-SERIES HINGED PATIO DOOR - OUTSWING (WZ3)(IMPACT)*

MULLED ELEVATIONS

PREPARED BY:
BUILDING DROPS, INC.
398 E. DANIA BEACH BLVD., STE. 338
DANIA BEACH, FL 33004
PH: (954)399-8478
FAX: (954)744.4738
WEB: www.buildingdrops.com

REMARKS	BY	DATE
FBC 17TH EDITION UPDATE	HR	7.2.18
ADDED ZERO, $\frac{1}{2}$", & 1" MULL	HR	4.12.19
ADDED 3/4" X 5-3/16" MULL & DP CHARTS	LL	8.2.19

THE INSTALLATION DETAILS DESCRIBED HEREIN ARE GENERIC AND MAY NOT REFLECT ACTUAL CONDITIONS FOR A SPECIFIC SITE. IF SITE CONDITIONS CAUSE INSTALLATION TO DEVIATE FROM THE REQUIREMENTS DETAILED HEREIN, A LICENSED ENGINEER OR ARCHITECT SHALL PREPARE SITE SPECIFIC DOCUMENTS FOR USE WITH THIS DOCUMENT.

HERMES F. NORERO LICENSE No. 73778 STATE OF FLORIDA PROFESSIONAL ENGINEER

HERMES F. NORERO, P.E.
FLORIDA P.E. No 73778
BUILDING DROPS, INC
398 E. DANIA BEACH BLVD. # 338
DANIA BEACH, FL 33004
FBPE CERT. OF AUTHORIZATION No. 29578

FL #: FL25570

DATE: 10.02.17

DWG. BY: HR | CHK. BY: HFN

SCALE: NTS

DWG. #: AWD231

SECTION 2.1

8/14/2019 6:50 PM
s:\projects\andersen windows\fbc-19-0548.2 - fbc submittal - e-series mullion revisions\dwgs\f25570.1, 2, 3 & 4\awd231 - fl15254.1-impact - non hvhz new format.dwg

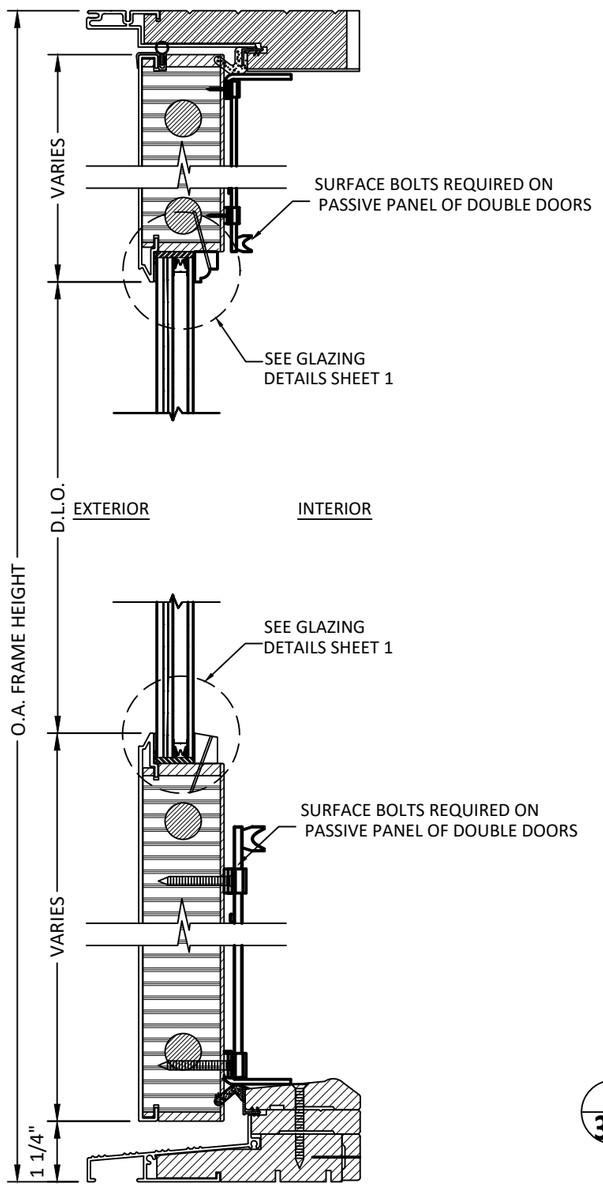

1 / 3.0 **VERTICAL SECTION**

FULL GLAZED PANEL

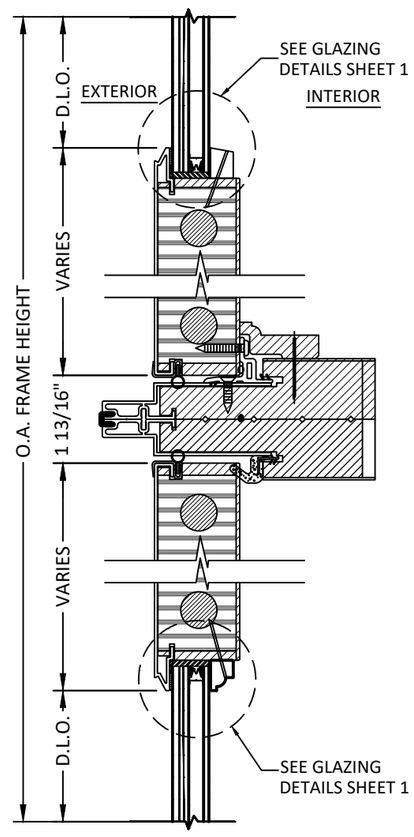

3 / 3.0 **VERTICAL SECTION**

INSULATED GLASS
ZERO MULLION

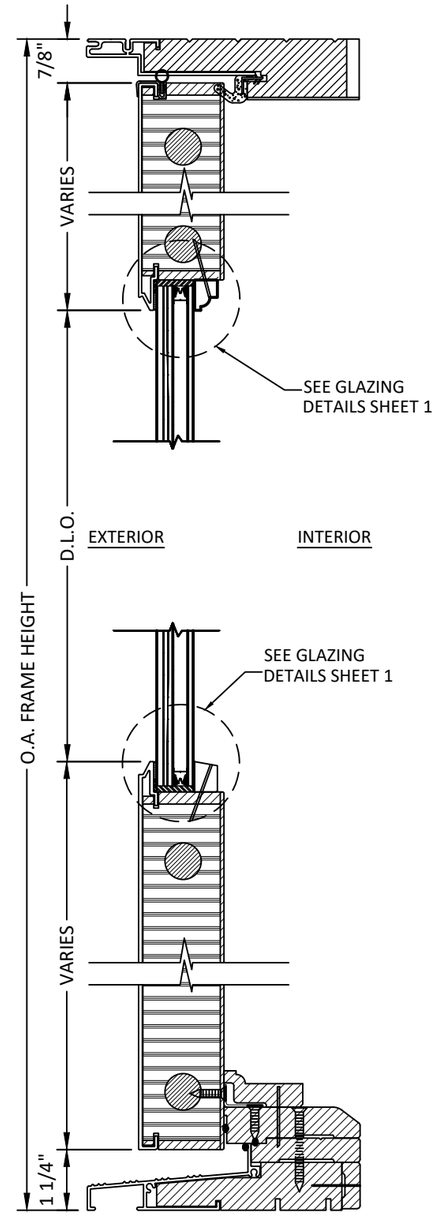

2 / 3.0 **VERTICAL SECTION**

FULL GLAZED SIDELITE

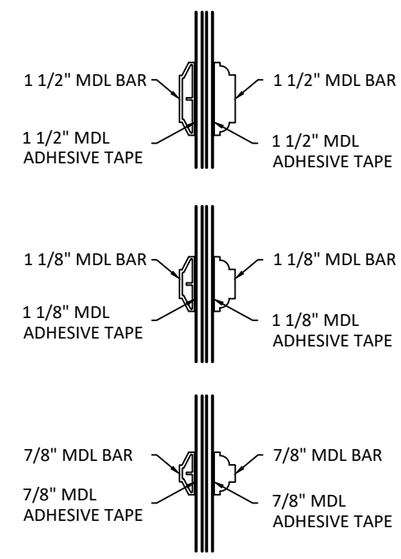

OPTIONAL MUNTIN BAR ATTACHMENT TO GLASS

Andersen AW WINDOWS • DOORS
100 FOURTH AVE. NORTH
BAYPORT, MN 55003-1096
PH: (651) 264-5150 FX: (651) 264-5485

TITLE: *E-SERIES HINGED PATIO DOOR - OUTSWING (WZ3)(IMPACT)*

VERTICAL SECTIONS

PREPARED BY:
BUILDING DROPS, INC.
398 E. DANIA BEACH BLVD., STE. 338
DANIA BEACH, FL 33004
PH: (954)399-8478
FAX: (954)744.4738
WEB: www.buildingdrops.com

REMARKS	BY	DATE
FBC 17TH EDITION UPDATE	HR	7.2.18
ADDED ZERO, $\frac{1}{2}$", & 1" MULL	HR	4.12.19
ADDED 3/4" X 5-3/16" MULL & DP CHARTS	LL	8.2.19

THE INSTALLATION DETAILS DESCRIBED HEREIN ARE GENERIC AND MAY NOT REFLECT ACTUAL CONDITIONS FOR A SPECIFIC SITE. IF SITE CONDITIONS CAUSE INSTALLATION TO DEVIATE FROM THE REQUIREMENTS DETAILED HEREIN, A LICENSED ENGINEER OR ARCHITECT SHALL PREPARE SITE SPECIFIC DOCUMENTS FOR USE WITH THIS DOCUMENT.

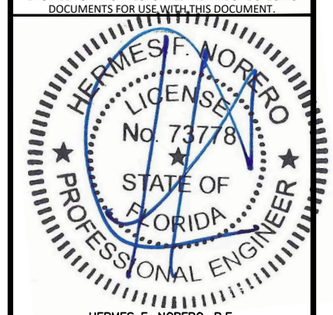

HERMES F. NORERO, P.E.
FLORIDA P.E. No 73778
BUILDING DROPS, INC
398 E. DANIA BEACH BLVD. # 338
DANIA BEACH, FL 33004
FBPE CERT. OF AUTHORIZATION No. 29578

FL #: FL25570

DATE: 10.02.17

DWG. BY: HR | CHK. BY: HFN

SCALE: NTS

DWG. #: AWD231

SECTION 3.0

8/14/2019 6:50 PM
s:\projects\andersen windows\fbc-19-0548.2 - fbc submittal - e-series mullion revisions\dwgs\f25570.1, 2, 3, & 4\awd231 - fl15254.1-impact - non hvhz new format.dwg

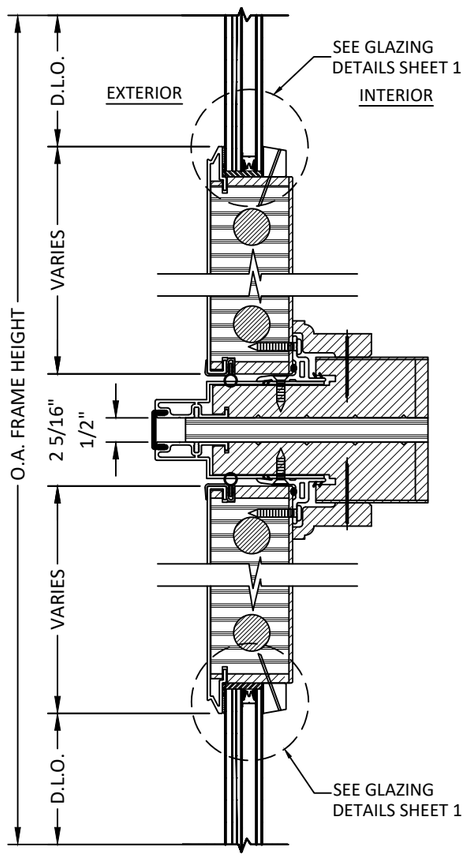

1/3.1 VERTICAL SECTION

INSULATED GLASS
1/2" X 5-3/16" MULLION

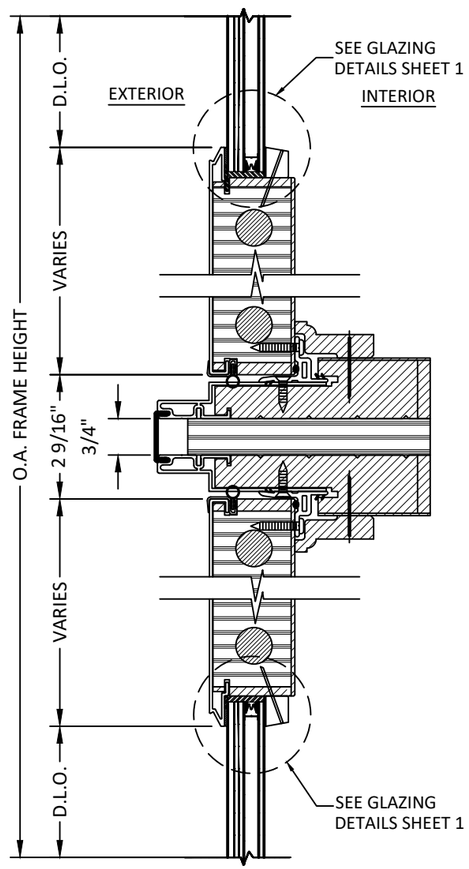

2/3.1 VERTICAL SECTION

INSULATED GLASS
3/4" X 5-3/16" MULLION

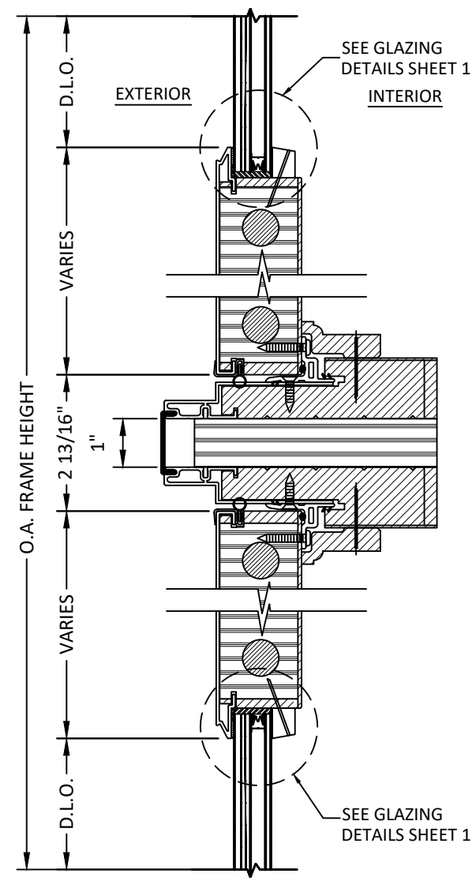

3/3.1 VERTICAL SECTION

INSULATED GLASS
1" X 5-3/16" MULLION

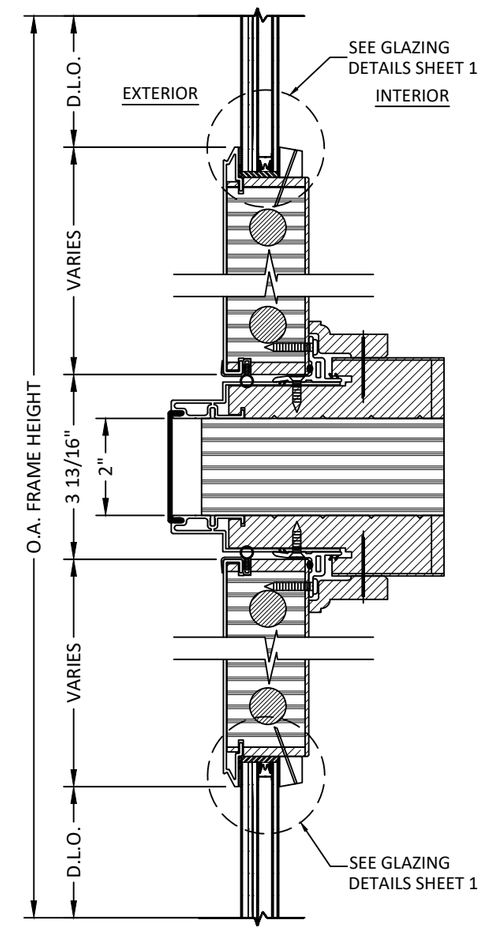

4/3.1 VERTICAL SECTION

INSULATED GLASS
2" X 5-3/16" MULLION

Andersen AW WINDOWS • DOORS
100 FOURTH AVE. NORTH
BAYPORT, MN 55003-1096
PH: (651) 264-5150 FX: (651) 264-5485

TITLE: *E-SERIES HINGED PATIO DOOR - OUTSWING (WZ3)(IMPACT)*

VERTICAL SECTIONS

PREPARED BY:
BUILDING DROPS, INC.
398 E. DANIA BEACH BLVD., STE. 338
DANIA BEACH, FL 33004
PH: (954)399-8478
FAX: (954)744.4738
WEB: www.buildingdrops.com

REMARKS	BY	DATE
FBC 17TH EDITION UPDATE	HR	7.2.18
ADDED ZERO, $\frac{1}{2}$", & 1" MULL	HR	4.12.19
ADDED 3/4" X 5-3/16" MULL & DP CHARTS	LL	8.2.19

THE INSTALLATION DETAILS DESCRIBED HEREIN ARE GENERIC AND MAY NOT REFLECT ACTUAL CONDITIONS FOR A SPECIFIC SITE. IF SITE CONDITIONS CAUSE INSTALLATION TO DEVIATE FROM THE REQUIREMENTS DETAILED HEREIN, A LICENSED ENGINEER OR ARCHITECT SHALL PREPARE SITE SPECIFIC DOCUMENTS FOR USE WITH THIS DOCUMENT.

HERMES F. NORERO
LICENSE No. 73778
STATE OF FLORIDA
PROFESSIONAL ENGINEER

HERMES F. NORERO, P.E.
FLORIDA P.E. No 73778
BUILDING DROPS, INC
398 E. DANIA BEACH BLVD. # 338
DANIA BEACH, FL 33004
FBPE CERT. OF AUTHORIZATION No. 29578

FL #: FL25570

DATE: 10.02.17

DWG. BY: HR | CHK. BY: HFN

SCALE: NTS

DWG. #: AWD231

SECTION 3.1

8/14/2019 6:50 PM
s:\projects\andersen windows\fbc-19-0548.2 - fbc submittal - e-series mullion revisions\dwgs\fl25570.1, 2, 3, & 4\awd231 - fl15254.1-impact - non hvhz new format.dwg

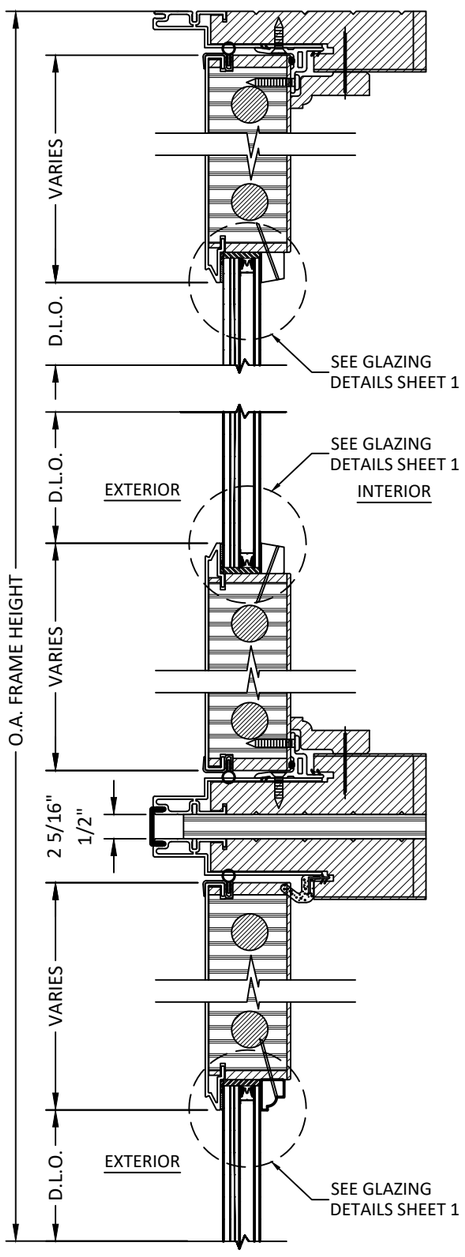

1/3.2 VERTICAL SECTION

TRANSOM HEAD WITH INSULATED GLASS
1/2" X 5-3/16" MULLION

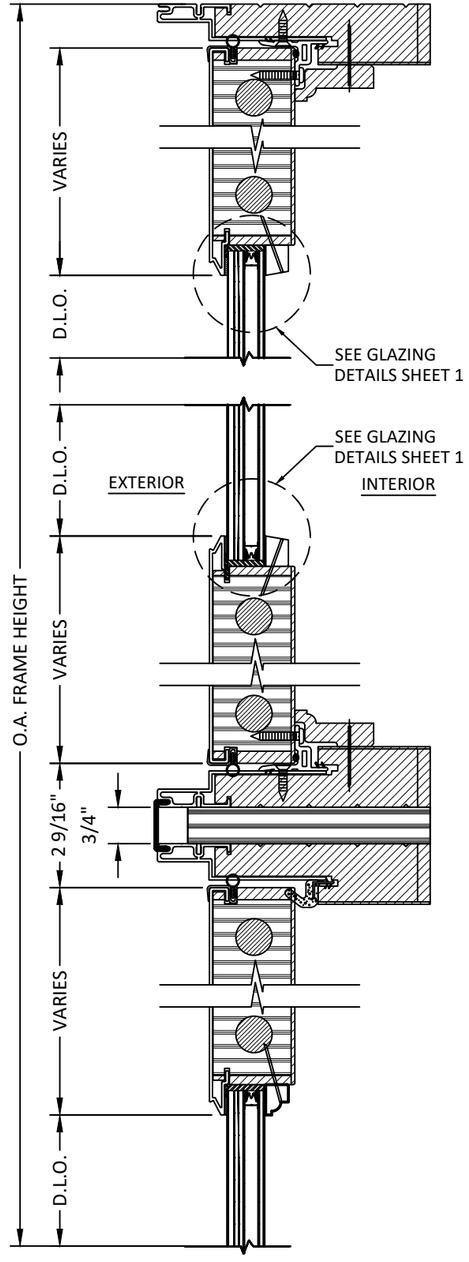

2/3.2 VERTICAL SECTION

TRANSOM HEAD WITH INSULATED GLASS
3/4" X 5-3/16" MULLION

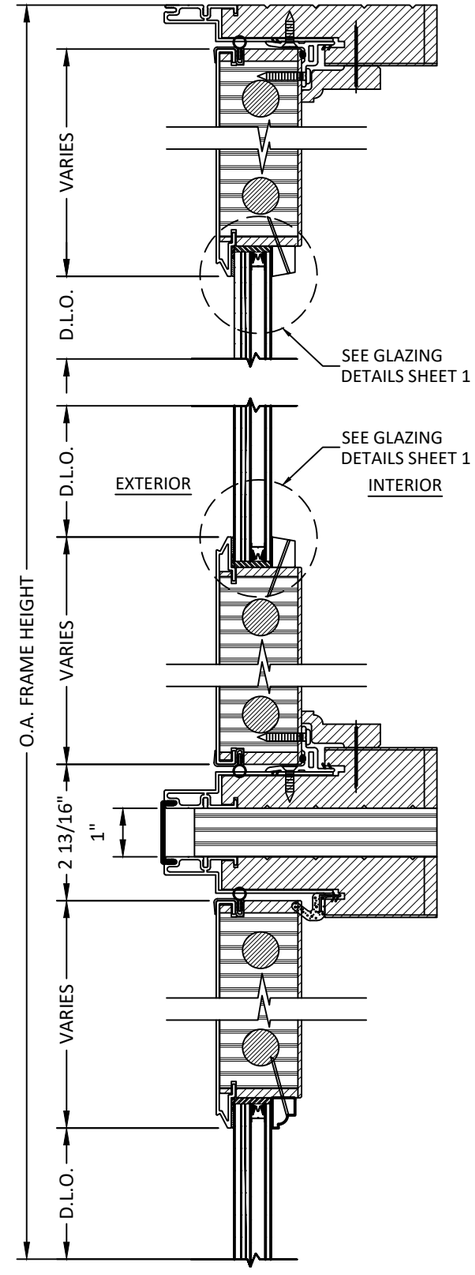

3/3.2 VERTICAL SECTION

TRANSOM HEAD WITH INSULATED GLASS
1" X 5-3/16" MULLION

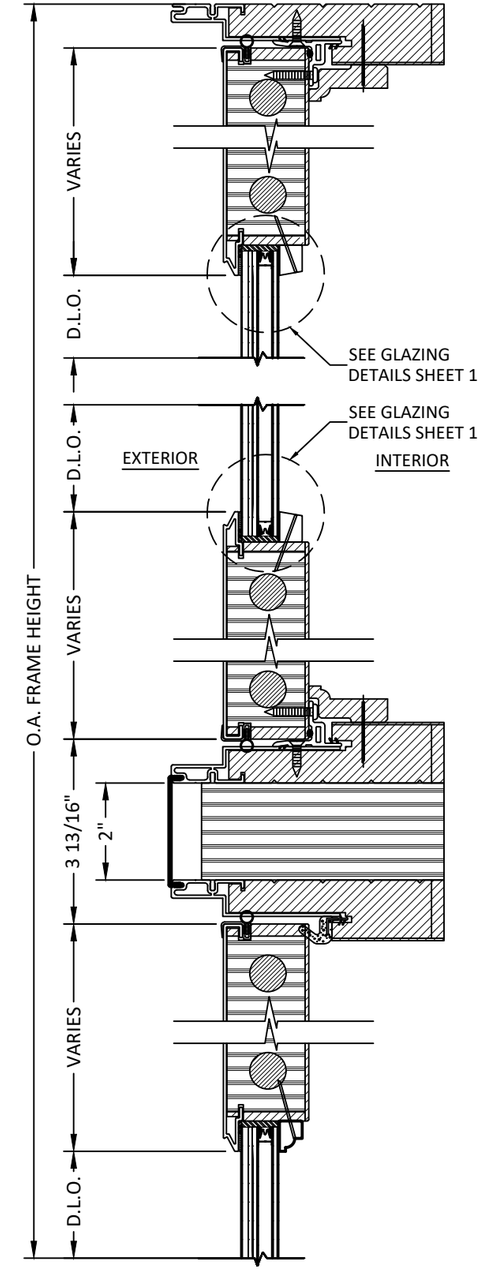

4/3.2 VERTICAL SECTION

TRANSOM HEAD WITH INSULATED GLASS
2" X 5-3/16" MULLION

Andersen AW WINDOWS • DOORS
100 FOURTH AVE. NORTH
BAYPORT, MN 55003-1096
PH: (651) 264-5150 FX: (651) 264-5485

TITLE: *E-SERIES HINGED PATIO DOOR - OUTSWING (WZ3)(IMPACT)*

VERTICAL SECTIONS

PREPARED BY:
BUILDING DROPS, INC.
398 E. DANIA BEACH BLVD., STE. 338
DANIA BEACH, FL 33004
PH: (954)399-8478
FAX: (954)744.4738
WEB: www.buildingdrops.com

REMARKS	BY	DATE
FBC 17TH EDITION UPDATE	HR	7.2.18
ADDED ZERO, $\frac{1}{2}$", & 1" MULL	HR	4.12.19
ADDED 3/4" X 5-3/16" MULL & DP CHARTS	LL	8.2.19

THE INSTALLATION DETAILS DESCRIBED HEREIN ARE GENERIC AND MAY NOT REFLECT ACTUAL CONDITIONS FOR A SPECIFIC SITE. IF SITE CONDITIONS CAUSE INSTALLATION TO DEVIATE FROM THE REQUIREMENTS DETAILED HEREIN, A LICENSED ENGINEER OR ARCHITECT SHALL PREPARE SITE SPECIFIC DOCUMENTS FOR USE WITH THIS DOCUMENT.

HERMES F. NORERO
LICENSE No. 73778
STATE OF FLORIDA
PROFESSIONAL ENGINEER

HERMES F. NORERO, P.E.
FLORIDA P.E. No 73778
BUILDING DROPS, INC
398 E. DANIA BEACH BLVD. # 338
DANIA BEACH, FL 33004
FBPE CERT. OF AUTHORIZATION No. 29578

FL #: FL25570

DATE: 10.02.17

DWG. BY: HR | CHK. BY: HFN

SCALE: NTS

DWG. #: AWD231

SECTION 3.2

8/14/2019 6:50 PM
s:\projects\andersen windows\fbc-19-0548.2 - fbc submittal - e-series mullion revisions\dwgs\fl25570.1, .2, .3, & .4\awd231 - fl15254.1-impact - non hvhz new format.dwg

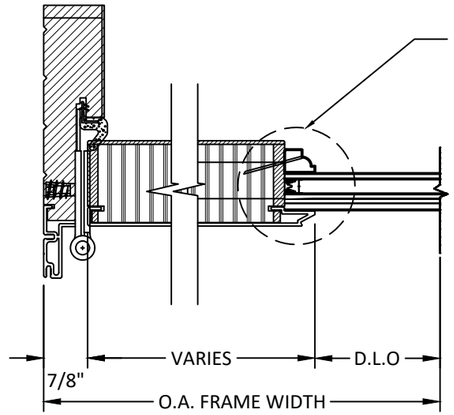

1/4.0 HORIZONTAL SECTION
HINGE JAMB

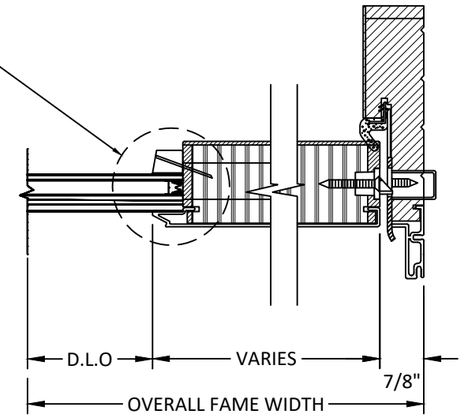

2/4.0 HORIZONTAL SECTION
LOCK JAMB

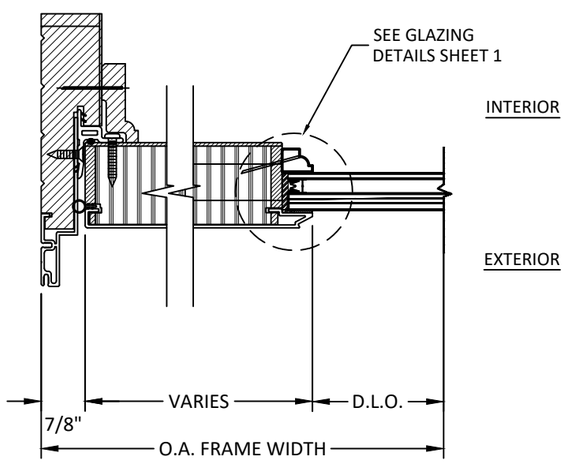

3/4.0 HORIZONTAL SECTION
SIDELITE JAMB

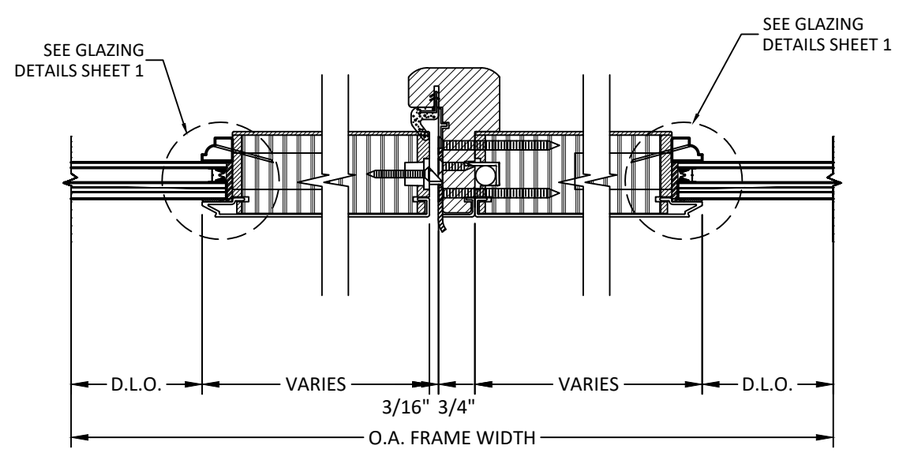

4/4.0 HORIZONTAL SECTION
ASTRAGAL

Andersen AW WINDOWS • DOORS
100 FOURTH AVE. NORTH
BAYPORT, MN 55003-1096
PH: (651) 264-5150 FX: (651) 264-5485

TITLE: *E-SERIES HINGED PATIO DOOR - OUTSWING (WZ3)(IMPACT)*
HORIZONTAL SECTIONS

PREPARED BY:
BUILDING DROPS, INC.
398 E. DANIA BEACH BLVD., STE. 338
DANIA BEACH, FL 33004
PH: (954)399-8478
FAX: (954)744.4738
WEB: www.buildingdrops.com

REMARKS	BY	DATE
FBC 17TH EDITION UPDATE	HR	7.2.18
ADDED ZERO, $\frac{1}{2}$", & 1" MULL	HR	4.12.19
ADDED 3/4" X 5-3/16" MULL & DP CHARTS	LL	8.2.19

THE INSTALLATION DETAILS DESCRIBED HEREIN ARE GENERIC AND MAY NOT REFLECT ACTUAL CONDITIONS FOR A SPECIFIC SITE. IF SITE CONDITIONS CAUSE INSTALLATION TO DEVIATE FROM THE REQUIREMENTS DETAILED HEREIN, A LICENSED ENGINEER OR ARCHITECT SHALL PREPARE SITE SPECIFIC DOCUMENTS FOR USE WITH THIS DOCUMENT.

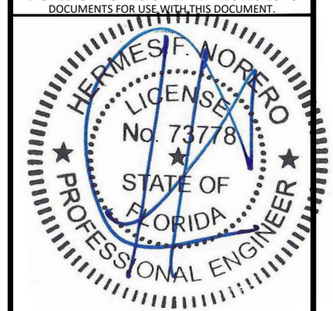

HERMES F. NORERO, P.E.
FLORIDA P.E. No 73778
BUILDING DROPS, INC
398 E. DANIA BEACH BLVD. # 338
DANIA BEACH, FL 33004
FBPE CERT. OF AUTHORIZATION No. 29578

FL #: FL25570

DATE: 10.02.17

DWG. BY: HR | CHK. BY: HFN

SCALE: NTS

DWG. #: AWD231

SECTION 4.0

8/14/2019 6:50 PM
s:\projects\andersen windows\fbc-19-0548.2 - fbc submittal - e-series mullion revisions\dwgs\fl25570.1, .2, .3, & .4\awd231 - fl15254.1-impact - non hvhz new format.dwg

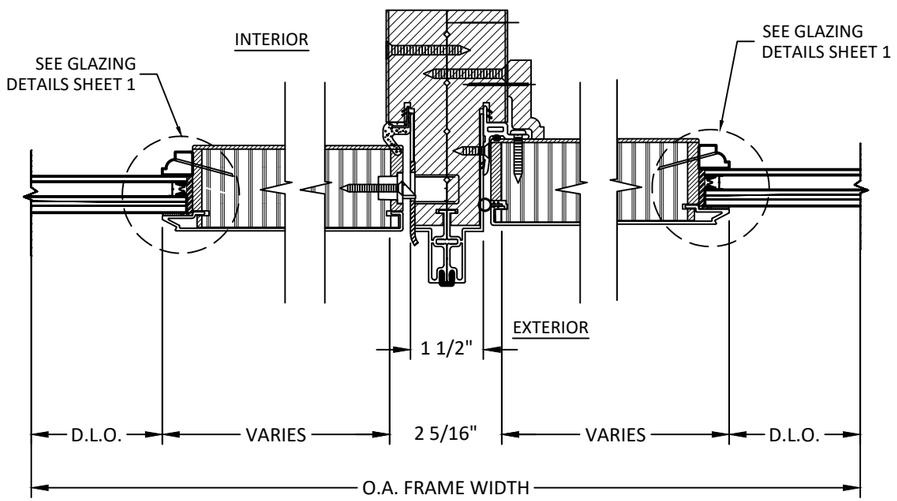

1/4.1 HORIZONTAL SECTION

ZERO MULLION
OPERABLE TO FIXED

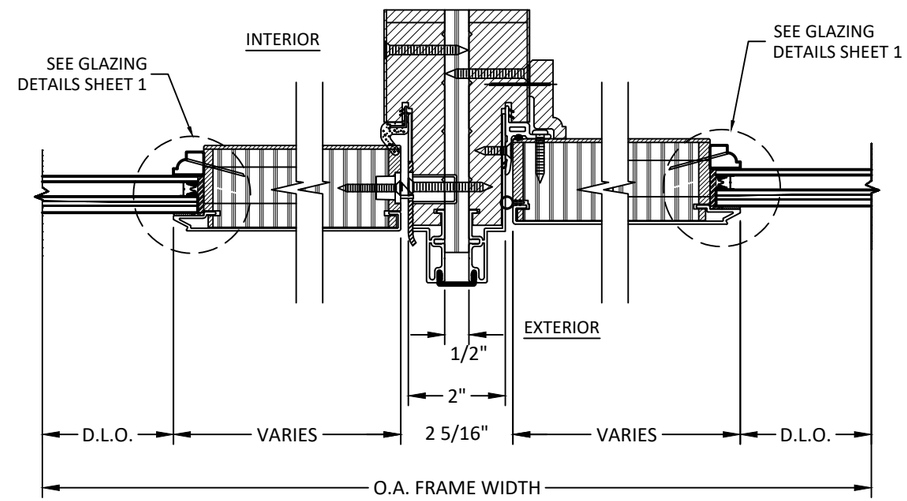

2/4.1 HORIZONTAL SECTION

1/2" X 5-3/16" MULLION
OPERABLE TO FIXED

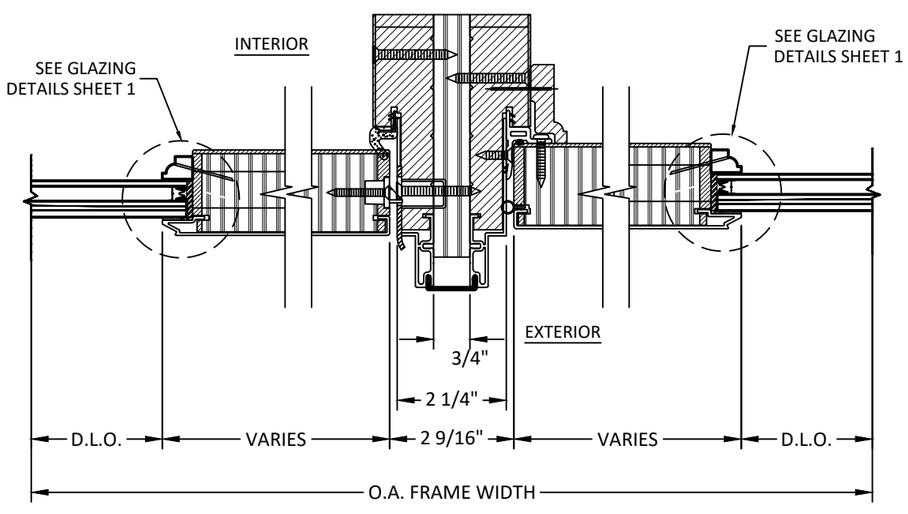

3/4.1 HORIZONTAL SECTION

3/4" X 5-3/16" MULLION
OPERABLE TO FIXED

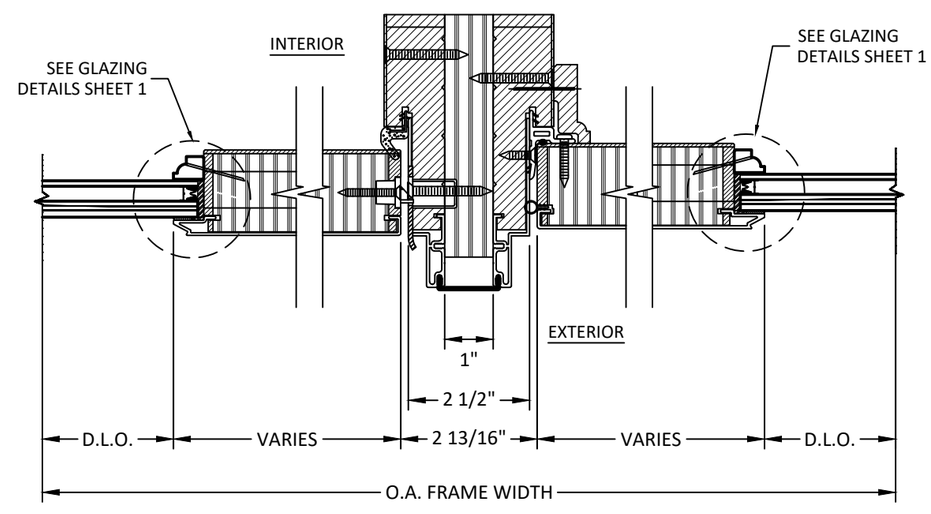

4/4.1 HORIZONTAL SECTION

1" X 5-3/16" MULLION
OPERABLE TO FIXED

Andersen AW WINDOWS • DOORS
100 FOURTH AVE. NORTH
BAYPORT, MN 55003-1096
PH: (651) 264-5150 FX: (651) 264-5485

TITLE: *E-SERIES HINGED PATIO DOOR - OUTSWING (WZ3)(IMPACT)*

HORIZONTAL SECTIONS

PREPARED BY:
BUILDING DROPS, INC.
398 E. DANIA BEACH BLVD., STE. 338
DANIA BEACH, FL 33004
PH: (954)399-8478
FAX: (954)744.4738
WEB: www.buildingdrops.com

REMARKS	BY	DATE
FBC 17TH EDITION UPDATE	HR	7.2.18
ADDED ZERO, $\frac{1}{2}$", & 1" MULL	HR	4.12.19
ADDED 3/4" X 5-3/16" MULL & DP CHARTS	LL	8.2.19

THE INSTALLATION DETAILS DESCRIBED HEREIN ARE GENERIC AND MAY NOT REFLECT ACTUAL CONDITIONS FOR A SPECIFIC SITE. IF SITE CONDITIONS CAUSE INSTALLATION TO DEVIATE FROM THE REQUIREMENTS DETAILED HEREIN, A LICENSED ENGINEER OR ARCHITECT SHALL PREPARE SITE SPECIFIC DOCUMENTS FOR USE WITH THIS DOCUMENT.

HERMES F. NORERO LICENSE No. 73778 STATE OF FLORIDA PROFESSIONAL ENGINEER

HERMES F. NORERO, P.E.
FLORIDA P.E. No 73778
BUILDING DROPS, INC
398 E. DANIA BEACH BLVD. # 338
DANIA BEACH, FL 33004
FBPE CERT. OF AUTHORIZATION No. 29578

FL #: FL25570

DATE: 10.02.17

DWG. BY: HR | CHK. BY: HFN

SCALE: NTS

DWG. #: AWD231

SECTION 4.1

8/14/2019 6:50 PM
s:\projects\andersen windows\fbc-19-0548.2 - fbc submittal - e-series mullion revisions\dwgs\fl25570.1, .2, .3 & .4\awd231 - fl15254.1-impact - non hvhz new format.dwg

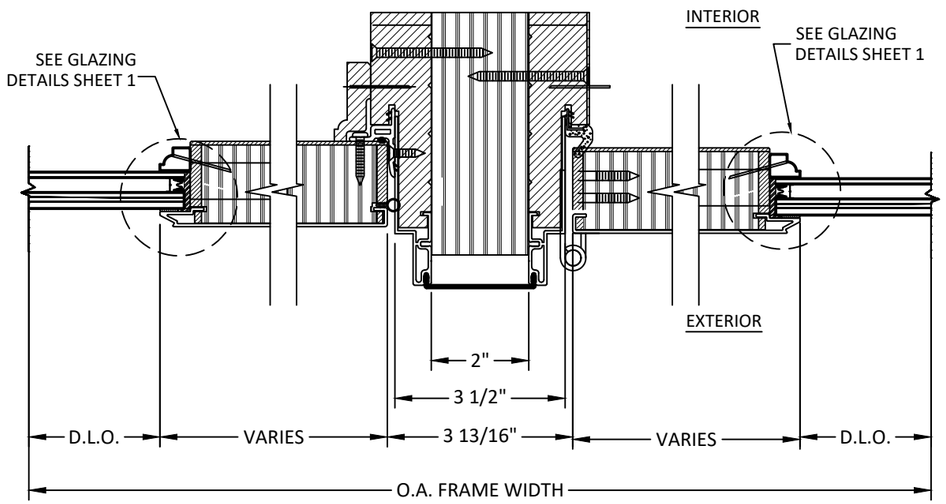

1/4.2 HORIZONTAL SECTION

2" MULLION
FIXED TO OPERABLE

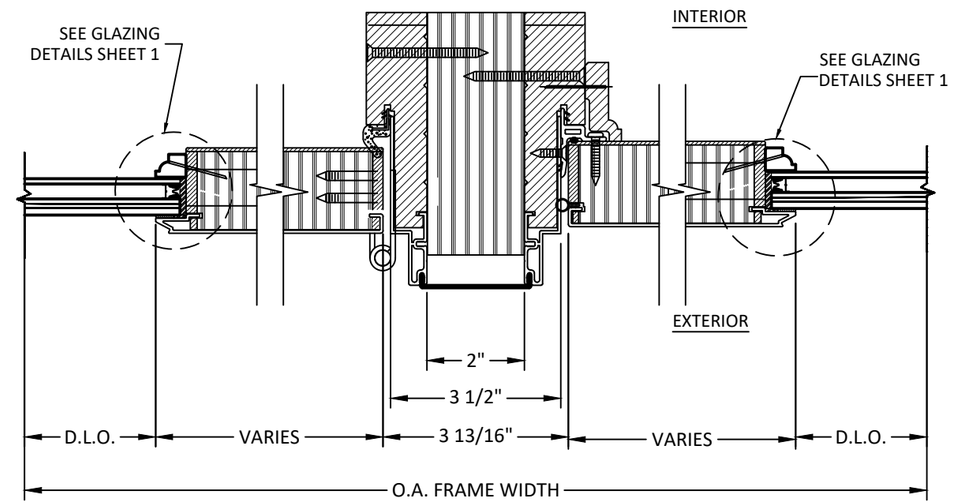

2/4.2 HORIZONTAL SECTION

2" MULLION
OPERABLE TO FIXED

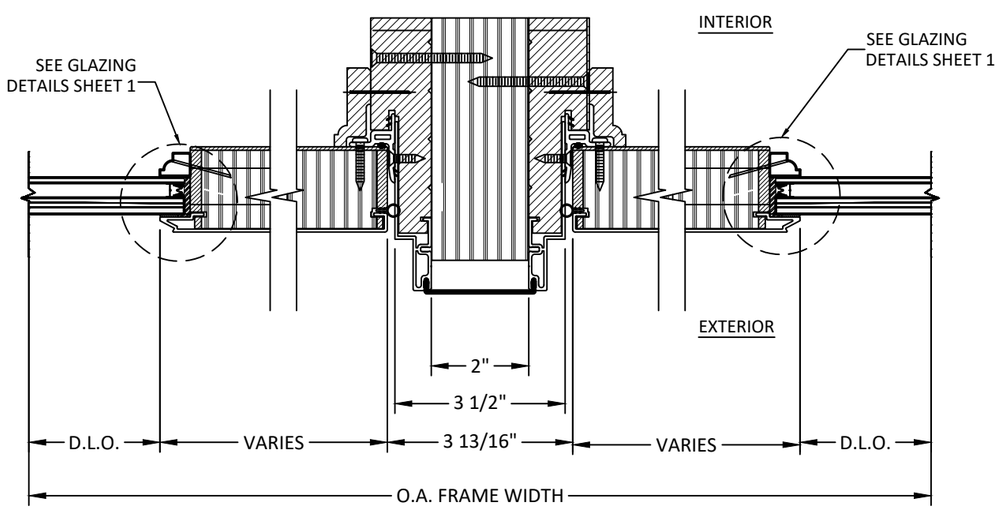

3/4.2 HORIZONTAL SECTION

2" MULLION
FIXED TO FIXED LITE

Andersen AW WINDOWS • DOORS
100 FOURTH AVE. NORTH
BAYPORT, MN 55003-1096
PH: (651) 264-5150 FX: (651) 264-5485

TITLE: *E-SERIES HINGED PATIO DOOR - OUTSWING (WZ3)(IMPACT)*

HORIZONTAL SECTIONS

PREPARED BY:
BUILDING DROPS, INC.
398 E. DANIA BEACH BLVD., STE. 338
DANIA BEACH, FL 33004
PH: (954)399-8478
FAX: (954)744.4738
WEB: www.buildingdrops.com

REMARKS	BY	DATE
FBC 17TH EDITION UPDATE	HR	7.2.18
ADDED ZERO, $\frac{1}{2}$", & 1" MULL	HR	4.12.19
ADDED 3/4" X 5-3/16" MULL & DP CHARTS	LL	8.2.19

THE INSTALLATION DETAILS DESCRIBED HEREIN ARE GENERIC AND MAY NOT REFLECT ACTUAL CONDITIONS FOR A SPECIFIC SITE. IF SITE CONDITIONS CAUSE INSTALLATION TO DEVIATE FROM THE REQUIREMENTS DETAILED HEREIN, A LICENSED ENGINEER OR ARCHITECT SHALL PREPARE SITE SPECIFIC DOCUMENTS FOR USE WITH THIS DOCUMENT.

HERMES F. NORERO LICENSE No. 73778 STATE OF FLORIDA PROFESSIONAL ENGINEER

HERMES F. NORERO, P.E.
FLORIDA P.E. No 73778
BUILDING DROPS, INC
398 E. DANIA BEACH BLVD. # 338
DANIA BEACH, FL 33004
FBPE CERT. OF AUTHORIZATION No. 29578

FL #: FL25570

DATE: 10.02.17

DWG. BY: HR | CHK. BY: HFN

SCALE: NTS

DWG. #: AWD231

SECTION 4.2

8/14/2019 6:50 PM
s:\projects\andersen windows\fbc-19-0548.2 - fbc submittal - e-series mullion revisions\dwgs\fl25570.1, .2, .3, & .4\awd231 - fl15254.1-impact - non hvhz new format.dwg

PANELS & SIDELITES TYPES

NOTES:
1. REFER TO SECTION 2 FOR CORRESPONDING PANEL TYPES AND CONFIGURATION QUALIFIED TO BE USED WITH THIS APPROVAL.

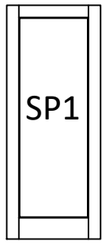

4 11/16" STILES & RAIL
8" BOTTOM RAIL

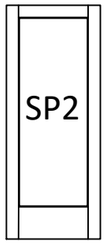

4 11/16" STILES & RAIL
12" BOTTOM RAIL

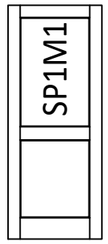

4 11/16" STILES & RAIL
8" BOTTOM RAIL &
MID-RAIL

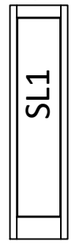

2 3/4" STILES & 4 11/16"
TOP RAIL
8" BOTTOM RAIL

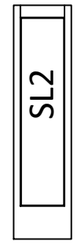

2 3/4" STILES
12" BOTTOM RAIL
& 4 11/16" TOP RAIL

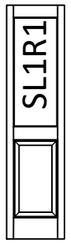

2 3/4" STILES & MID-RAIL
8" BOTTOM RAIL
& 4 11/16" TOP RAIL
EMBOSSED PANEL

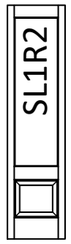

2 3/4" STILES & MID-RAIL
8" BOTTOM RAIL
& 4 11/16" TOP RAIL
EMBOSSED PANEL

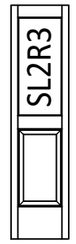

2 3/4" STILES & MID-RAIL
12" BOTTOM RAIL
& 4 11/16" TOP RAIL
EMBOSSED PANEL

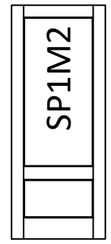

4 11/16" STILES & RAIL
8" BOTTOM RAIL &
MID-RAIL

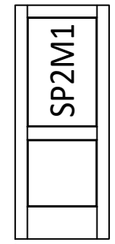

4 11/16" STILES & RAIL
12" BOTTOM RAIL &
MID-RAIL

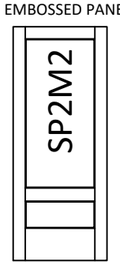

4 11/16" STILES & RAIL
12" BOTTOM RAIL &
MID-RAIL

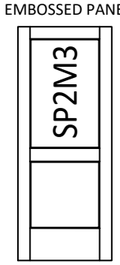

4 11/16" STILES & RAIL
12" BOTTOM RAIL &
MID-RAIL

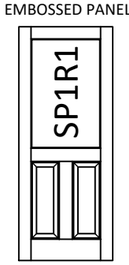

4 11/16" STILES, RAIL &
MID-RAIL
8" BOTTOM RAIL &
EMBOSSED PANEL

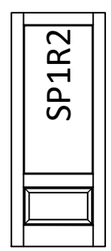

4 11/16" STILES, RAIL &
MID-RAIL
8" BOTTOM RAIL &
EMBOSSED PANEL

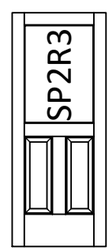

4 11/16" STILES, RAIL &
MID-RAIL
12" BOTTOM RAIL &
EMBOSSED PANEL

4 11/16" STILES
& 2 3/4" RAILS

2 3/4" STILES
& 2 3/4" RAILS

4 11/16" STILES
& 4 11/16" RAILS

2 3/4" STILES
& 4 11/16" RAILS

3 11/16" STILES
& 3 11/16" RAILS

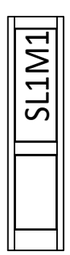

2 3/4" STILES &
4 11/16" TOP RAIL
8" BOTTOM RAIL &
MID-RAIL

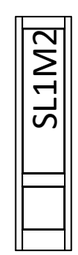

2 3/4" STILES &
4 11/16" TOP RAIL
8" BOTTOM RAIL &
MID-RAIL

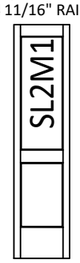

2 3/4" STILES &
MID-RAIL
12" BOTTOM RAIL &
4 11/16" TOP RAIL

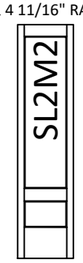

2 3/4" STILES &
MID-RAIL
12" BOTTOM RAIL &
4 11/16" TOP RAIL

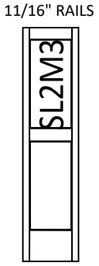

2 3/4" STILES &
MID-RAIL
12" BOTTOM RAIL &
4 11/16" TOP RAIL

	SP1	SP2	SL1	SL2	ST1	ST2	ST3	ST4	ST5
TOP RAIL	3	3	3	3	5	5	3	3	4
STILES	3	3	5	5	3	5	3	5	4
BOTTOM RAIL	2	1	2	1	5	5	3	3	4

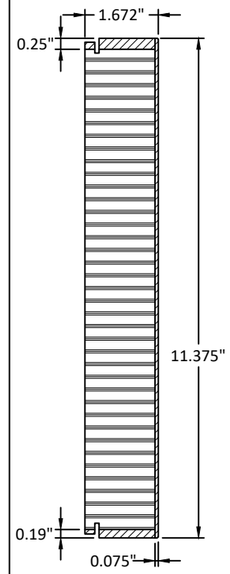

1 BOTTOM RAIL

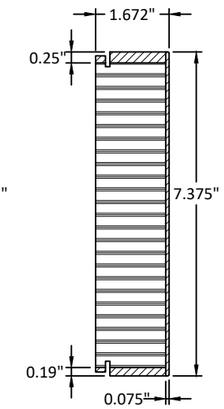

2 BOTTOM RAIL

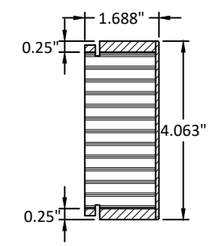

3 TOP RAIL & STILE

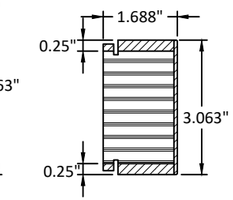

4 TOP RAIL & STILE

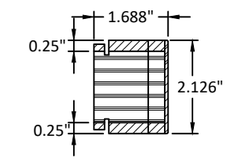

5 STILE

ALLOWABLE SHAPES

Andersen AW WINDOWS • DOORS
100 FOURTH AVE. NORTH
BAYPORT, MN 55003-1096
PH: (651) 264-5150 FX: (651) 264-5485

TITLE: *E-SERIES HINGED PATIO DOOR - OUTSWING (WZ3)(IMPACT)*

PANELS & SIDELITES DETAILS

PREPARED BY:
BUILDING DROPS, INC.
398 E. DANIA BEACH BLVD., STE. 338
DANIA BEACH, FL 33004
PH: (954)399-8478
FAX: (954)744.4738
WEB: www.buildingdrops.com

REMARKS	BY	DATE
FBC 17TH EDITION UPDATE	HR	7.2.18
ADDED ZERO, $\frac{1}{2}$", & 1" MULL	HR	4.12.19
ADDED 3/4" X 5-3/16" MULL & DP CHARTS	LL	8.2.19

THE INSTALLATION DETAILS DESCRIBED HEREIN ARE GENERIC AND MAY NOT REFLECT ACTUAL CONDITIONS FOR A SPECIFIC SITE. IF SITE CONDITIONS CAUSE INSTALLATION TO DEVIATE FROM THE REQUIREMENTS DETAILED HEREIN, A LICENSED ENGINEER OR ARCHITECT SHALL PREPARE SITE SPECIFIC DOCUMENTS FOR USE WITH THIS DOCUMENT.

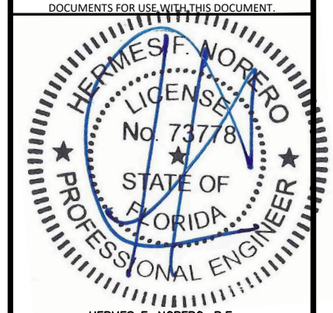

HERMES F. NORERO, P.E.
FLORIDA P.E. No 73778
BUILDING DROPS, INC
398 E. DANIA BEACH BLVD. # 338
DANIA BEACH, FL 33004
FBPE CERT. OF AUTHORIZATION No. 29578

FL #: FL25570

DATE: 10.02.17

DWG. BY: HR | CHK. BY: HFN

SCALE: NTS

DWG. #: AWD231

SECTION 5.0

8/14/2019 6:50 PM
s:\projects\andersen windows\fbc-19-0548.2 - fbc submittal - e-series mullion revisions\dwgs\fl25570.1, 2, 3, & 4\awd231 - fl15254.1-impact - non hvhz new format.dwg

NOTES:
1. SURFACE BOLTS REQUIRED ON IMPACT DOUBLE UNITS

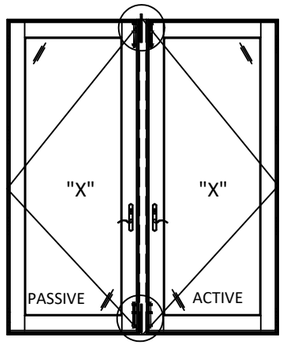

OPTION 1
(AW HARDWARE)

ACTIVE LEAF:
AUTOLATCH® MULTIPOINT LOCK SYSTEM, 105MM LOCK TO HANDLE SPACING, 50 MM LOCK/HANDLE BACKSET.
PASSIVE LEAF:
HANDLE OPERATED SHOOT BOLT THROUGH ASTRAGAL, LATCH AND DEADBOLT BLOKERS

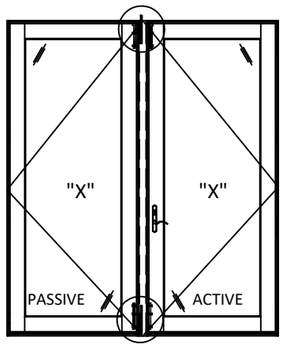

OPTION 2
(TYPE I)

ACTIVE LEAF:
AUTOLATCH® MULTIPOINT LOCK SYSTEM, 92MM LOCK TO HANDLE SPACING, 45 MM LOCK/HANDLE BACKSET.
PASSIVE LEAF:
MANUALLY OPERATED MORTISE LEVER SHOOT BOLT THROUGH ASTRAGAL, NO HANDLE.

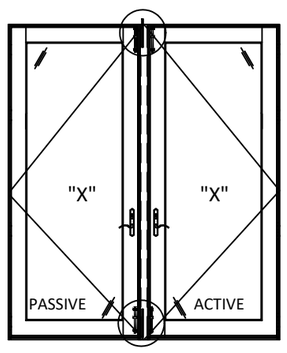

OPTION 3
(TYPE II)

ACTIVE LEAF:
AUTOLATCH® MULTIPOINT LOCK SYSTEM, 92MM LOCK TO HANDLE SPACING, 45 MM LOCK/HANDLE BACKSET.
PASSIVE LEAF:
MANUALLY OPERATED MORTISE LEVER SHOOT BOLT THROUGH ASTRAGAL. DUMMY HANDLE

HINGE LOCATIONS
USE #12 SCREW TYP.

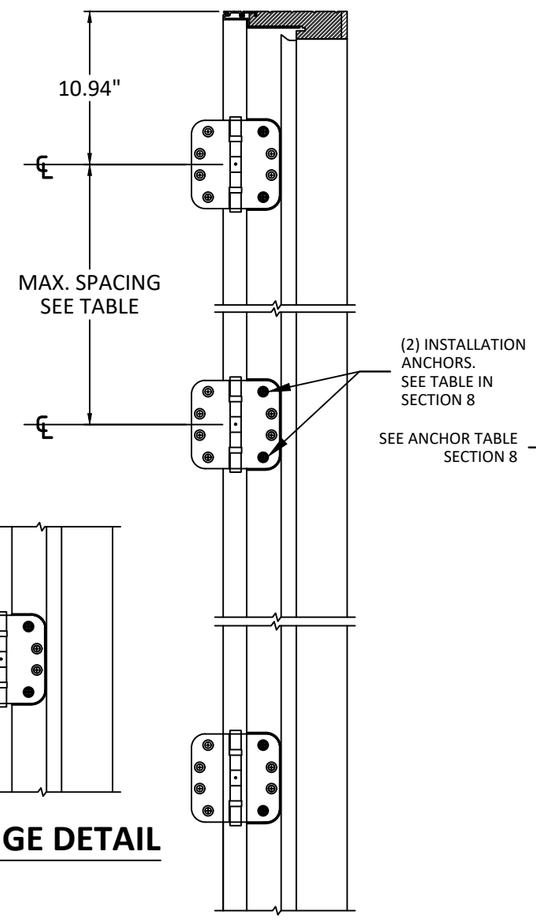

HINGE DETAIL

STRIKE LOCATION
USE #8 SCREW TYP.

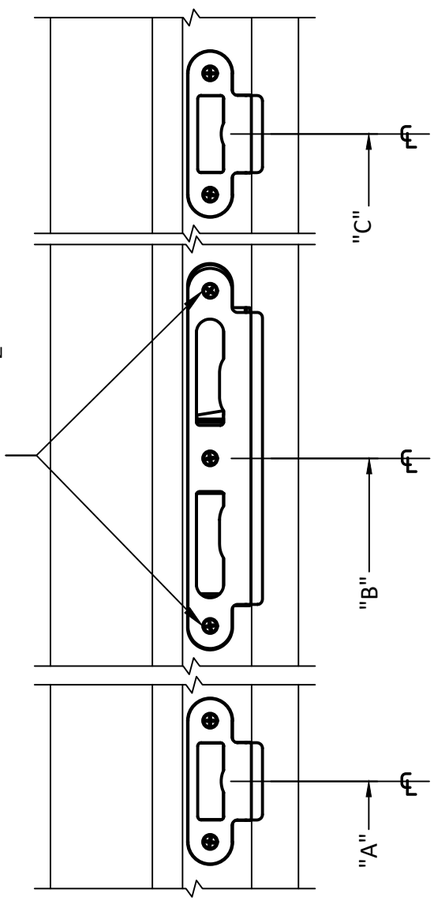

STRIKE PLATE LOCATIONS
@ ASTRAGAL/JAMB
APPLIES TO ALL LOCK OPTIONS

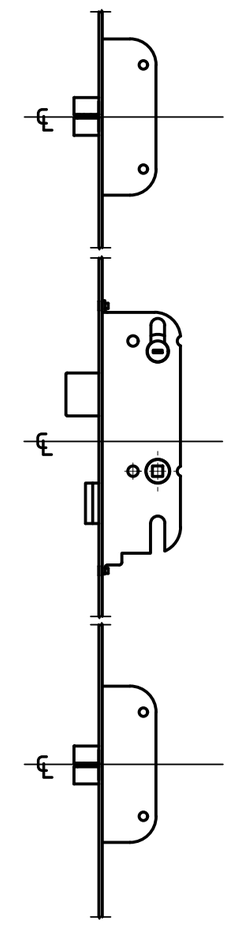

3-PT LOCK SYSTEM
ACTIVE / SINGLE DOOR
APPLIES TO ALL LOCK OPTIONS

STRIKE CL LOCATION MEASURED FROM THE BOTTOM					
FRAME OPENING HEIGHT	ACTUAL DOOR HEIGHT	"A"	"B"	"C"	"D"
80.5"	80"	14.875"	36.875"	67.469"	N/A
84.5"	84"				
96.5"	96"			79.675"	

HINGE LOCATIONS		
FRAME OPENING HEIGHT	ACTUAL DOOR HEIGHT	MAX. HINGE SPACING (CENTER TO CENTER)
80.5"	80"	28.52"
84.5"	84"	30.52"
96.5"	96"	24.35"

Andersen AW WINDOWS • DOORS
100 FOURTH AVE. NORTH
BAYPORT, MN 55003-1096
PH: (651) 264-5150 FX: (651) 264-5485

TITLE: *E-SERIES HINGED PATIO DOOR - OUTSWING (WZ3)(IMPACT)*
HARDWARE LOCATIONS

PREPARED BY:
BUILDING DROPS, INC.
398 E. DANIA BEACH BLVD., STE. 338
DANIA BEACH, FL 33004
PH: (954)399-8478
FAX: (954)744.4738
WEB: www.buildingdrops.com

REMARKS	BY	DATE
FBC 17TH EDITION UPDATE	HR	7.2.18
ADDED ZERO, $\frac{1}{2}$", & 1" MULL	HR	4.12.19
ADDED 3/4" X 5-3/16" MULL & DP CHARTS	LL	8.2.19

THE INSTALLATION DETAILS DESCRIBED HEREIN ARE GENERIC AND MAY NOT REFLECT ACTUAL CONDITIONS FOR A SPECIFIC SITE. IF SITE CONDITIONS CAUSE INSTALLATION TO DEVIATE FROM THE REQUIREMENTS DETAILED HEREIN, A LICENSED ENGINEER OR ARCHITECT SHALL PREPARE SITE SPECIFIC DOCUMENTS FOR USE WITH THIS DOCUMENT.

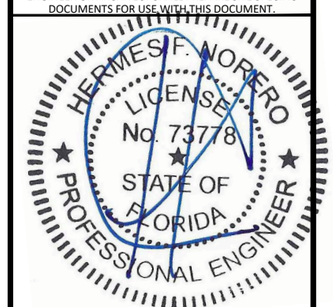

HERMES F. NORERO, P.E.
FLORIDA P.E. No 73778
BUILDING DROPS, INC
398 E. DANIA BEACH BLVD. # 338
DANIA BEACH, FL 33004
FBPE CERT. OF AUTHORIZATION No. 29578

FL #: FL25570
DATE: 10.02.17
DWG. BY: HR
CHK. BY: HFN
SCALE: NTS
DWG. #: AWD231
SECTION 6.0

8/14/2019 6:50 PM
s:\projects\andersen windows\fbc-19-0548.2 - fbc submittal - e-series mullion revisions\dwgs\fl25570.1, .2, .3, & .4\awd231 - fl15254.1-impact - non hvhz new format.dwg

ANCHOR LAYOUT

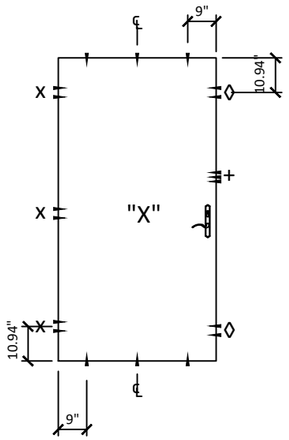

SINGLE

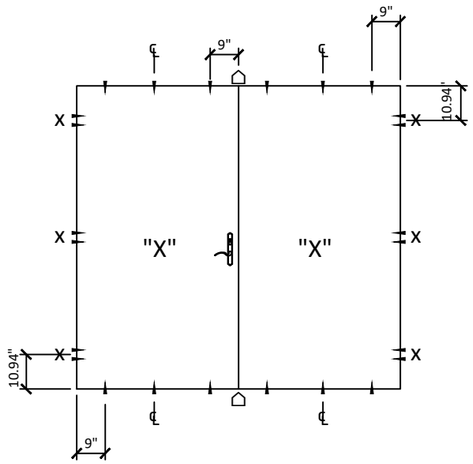

DOUBLE

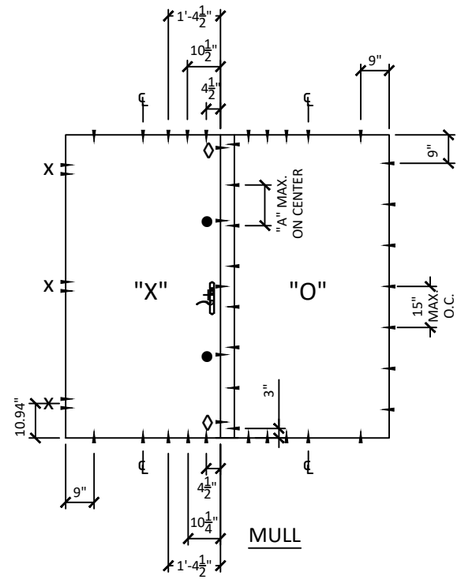

MULL

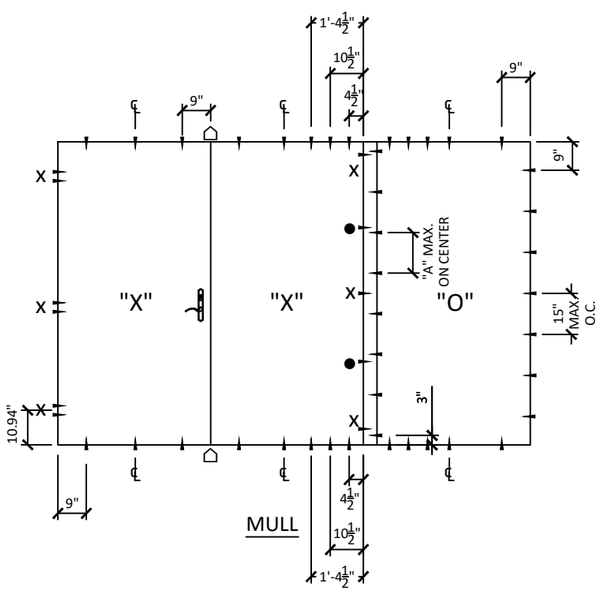

MULL

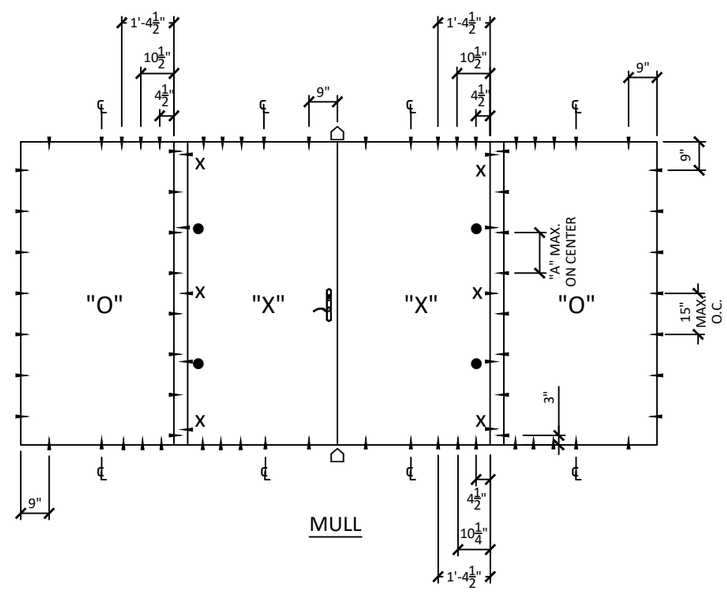

MULL

ACTIVE DOOR LEGEND "X"	
X	TWO (2) ANCHOR THRU HINGE PLATE
◊	ANCHORS THRU END RECEIVER - WOOD OR METAL: THREE (3) - CONCRETE / MASONRY: TWO (2)
+	ANCHORS THRU CENTER RECEIVER - WOOD OR STEEL: THREE (3) - CONCRETE / MASONRY: TWO (2)
⌂	ANCHORS THRU STRIKE HEAD PLATE: *DETAIL A:* - WOOD OR STEEL: TWO (2) - CONCRETE: TWO (2) *DETAIL C:* - WOOD OR STEEL: FOUR (4) - CONCRETE: TWO (2) ANCHORS THRU STRIKE SILL PLATE: *DETAIL B:* - WOOD OR STEEL: TWO (2) - CONCRETE: TWO (2) *DETAIL D:* - WOOD OR STEEL: FOUR (4) - CONCRETE: TWO (2)
•	ANCHOR MID-SPAN BETWEEN HINGES AND STRIKE PLATES

NOTE:
ANCHOR LOCATIONS APPLY TO SCREWS THROUGH FRAME, ALUMINUM NAIL FIN & STRAP INSTALLATION.

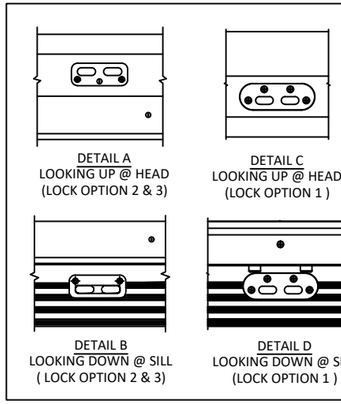

DESIGN PRESSURE	"A" DIMENSION
UP TO 75 PSF	13" MAX. O.C.

Andersen AW WINDOWS • DOORS
100 FOURTH AVE. NORTH
BAYPORT, MN 55003-1096
PH: (651) 264-5150 FX: (651) 264-5485

TITLE: *E-SERIES HINGED PATIO DOOR - OUTSWING (WZ3)(IMPACT)*
ANCHOR LAYOUTS

PREPARED BY:
BUILDING DROPS, INC.
398 E. DANIA BEACH BLVD., STE. 338
DANIA BEACH, FL 33004
PH: (954)399-8478
FAX: (954)744.4738
WEB: www.buildingdrops.com

REMARKS	BY	DATE
FBC 17TH EDITION UPDATE	HR	7.2.18
ADDED ZERO, ½", & 1" MULL	HR	4.12.19
ADDED 3/4" X 5-3/16" MULL & DP CHARTS	LL	8.2.19

THE INSTALLATION DETAILS DESCRIBED HEREIN ARE GENERIC AND MAY NOT REFLECT ACTUAL CONDITIONS FOR A SPECIFIC SITE. IF SITE CONDITIONS CAUSE INSTALLATION TO DEVIATE FROM THE REQUIREMENTS DETAILED HEREIN, A LICENSED ENGINEER OR ARCHITECT SHALL PREPARE SITE SPECIFIC DOCUMENTS FOR USE WITH THIS DOCUMENT.

HERMES F. NORERO
LICENSE No. 73778
STATE OF FLORIDA
PROFESSIONAL ENGINEER

HERMES F. NORERO, P.E.
FLORIDA P.E. No 73778
BUILDING DROPS, INC
398 E. DANIA BEACH BLVD. # 338
DANIA BEACH, FL 33004
FBPE CERT. OF AUTHORIZATION No. 29578

FL #: FL25570

DATE: 10.02.17

DWG. BY: HR | CHK. BY: HFN

SCALE: NTS

DWG. #: AWD231

SECTION 7.0

8/14/2019 6:51 PM
s:\projects\andersen windows\fbc-19-0548.2 - fbc submittal - e-series mullion revisions\dwgs\fl25570.1, .2, .3 & .4\awd231 - fl15254.1-impact - non hvhz new format.dwg

ANCHOR LAYOUT WITH TRANSOM

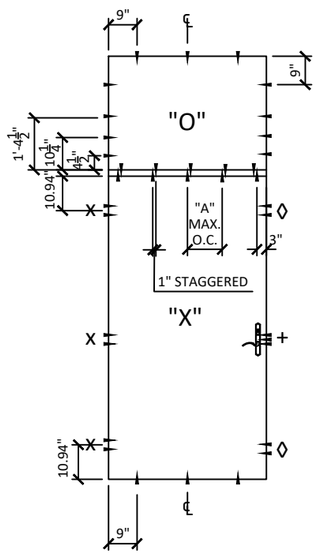

SINGLE

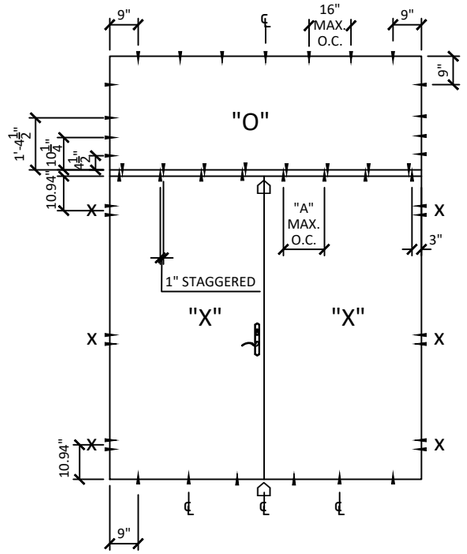

DOUBLE

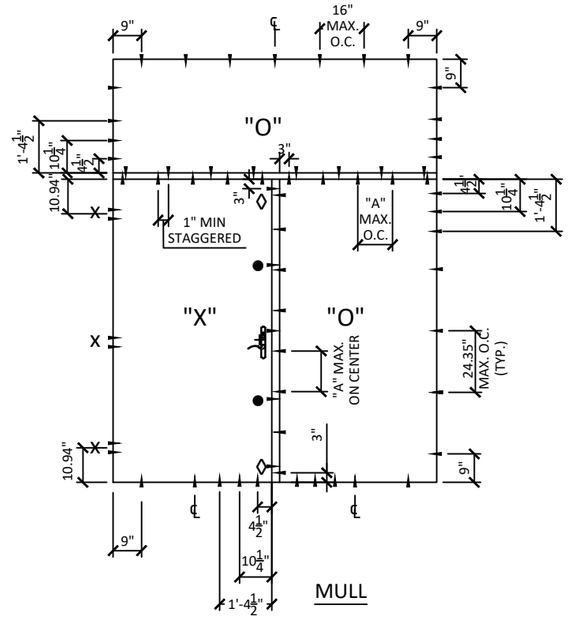

MULL

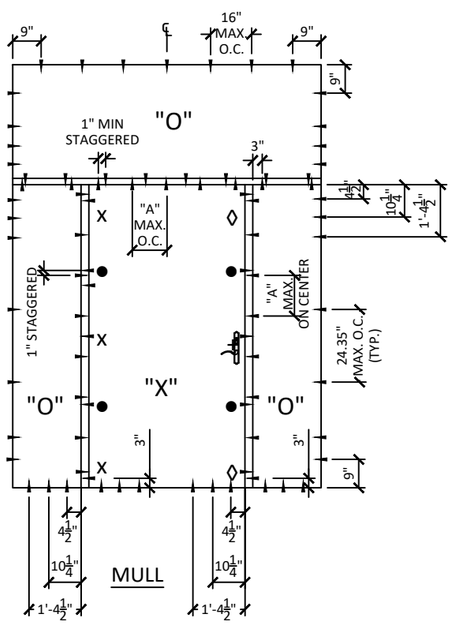

MULL

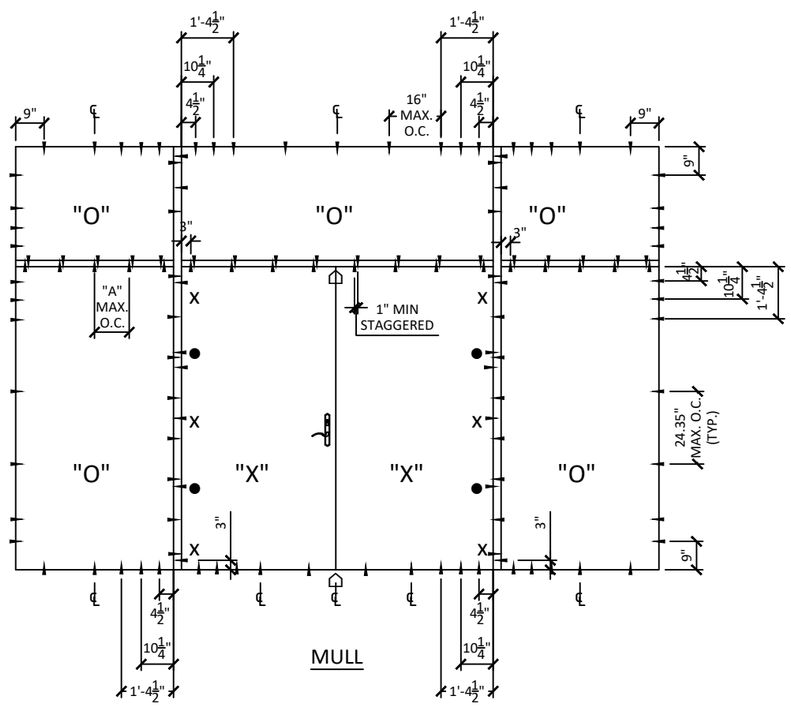

MULL

ACTIVE DOOR LEGEND "X"	
X	TWO (2) ANCHOR THRU HINGE PLATE
◊	ANCHORS THRU END RECEIVER - WOOD OR METAL: THREE (3) - CONCRETE / MASONRY: TWO (2)
+	ANCHORS THRU CENTER RECEIVER - WOOD OR STEEL: THREE (3) - CONCRETE / MASONRY: TWO (2)
⌂	ANCHORS THRU STRIKE HEAD PLATE: *DETAIL A:* - WOOD OR STEEL: TWO (2) - CONCRETE: TWO (2) *DETAIL C:* - WOOD OR STEEL: FOUR (4) - CONCRETE: TWO (2) ANCHORS THRU STRIKE SILL PLATE: *DETAIL B:* - WOOD OR STEEL: TWO (2) - CONCRETE: TWO (2) *DETAIL D:* - WOOD OR STEEL: FOUR (4) - CONCRETE: TWO (2)
•	ANCHOR MID-SPAN BETWEEN HINGES AND STRIKE PLATES

NOTE:
ANCHOR LOCATIONS APPLY TO SCREWS THROUGH FRAME, ALUMINUM NAIL FIN & STRAP INSTALLATION.

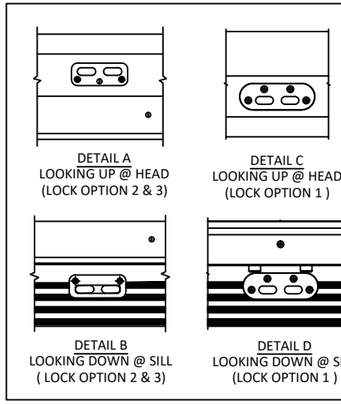

DESIGN PRESSURE	"A" DIMENSION
UP TO 75 PSF	13" MAX. O.C.

Andersen AW WINDOWS • DOORS
100 FOURTH AVE. NORTH
BAYPORT, MN 55003-1096
PH: (651) 264-5150 FX: (651) 264-5485

TITLE: *E-SERIES HINGED PATIO DOOR - OUTSWING (WZ3)(IMPACT)*
ANCHOR LAYOUTS

PREPARED BY:
BUILDING DROPS, INC.
398 E. DANIA BEACH BLVD., STE. 338
DANIA BEACH, FL 33004
PH: (954)399-8478
FAX: (954)744.4738
WEB: www.buildingdrops.com

REMARKS	BY	DATE
FBC 17TH EDITION UPDATE	HR	7.2.18
ADDED ZERO, ½", & 1" MULL	HR	4.12.19
ADDED 3/4" X 5-3/16" MULL & DP CHARTS	LL	8.2.19

THE INSTALLATION DETAILS DESCRIBED HEREIN ARE GENERIC AND MAY NOT REFLECT ACTUAL CONDITIONS FOR A SPECIFIC SITE. IF SITE CONDITIONS CAUSE INSTALLATION TO DEVIATE FROM THE REQUIREMENTS DETAILED HEREIN, A LICENSED ENGINEER OR ARCHITECT SHALL PREPARE SITE SPECIFIC DOCUMENTS FOR USE WITH THIS DOCUMENT.

HERMES F. NORERO
LICENSE No. 73778
STATE OF FLORIDA
PROFESSIONAL ENGINEER

HERMES F. NORERO, P.E.
FLORIDA P.E. No 73778
BUILDING DROPS, INC
398 E. DANIA BEACH BLVD. # 338
DANIA BEACH, FL 33004
FBPE CERT. OF AUTHORIZATION No. 29578

FL #: FL25570
DATE: 10.02.17
DWG. BY: HR
CHK. BY: HFN
SCALE: NTS
DWG. #: AWD231
SECTION 7.1

8/14/2019 6:51 PM
s:\projects\andersen windows\fbc-19-0548.2 - fbc submittal - e-series mullion revisions\dwgs\fl25570.1, .2, .3 & .4\awd231 - fl15254.1-impact - non hvhz new format.dwg

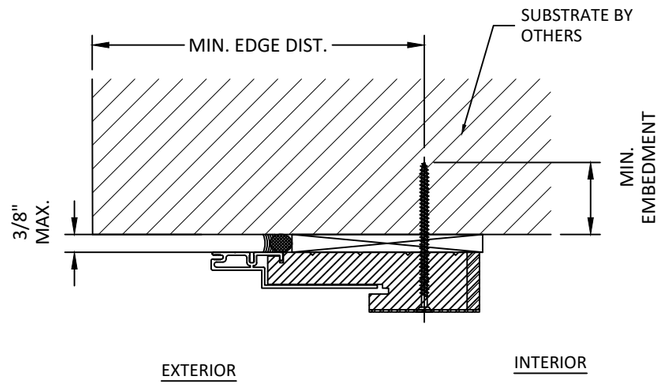

1 / 8.0 VERTICAL SECTION
DOOR HEAD OR JAMB OR SILL
THROUGH FRAME

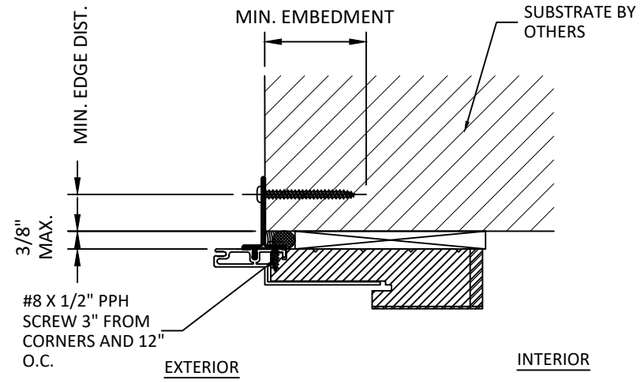

2 / 8.0 VERTICAL SECTION
DOOR HEAD OR JAMB OR SILL
ALUMINUM NAIL FIN

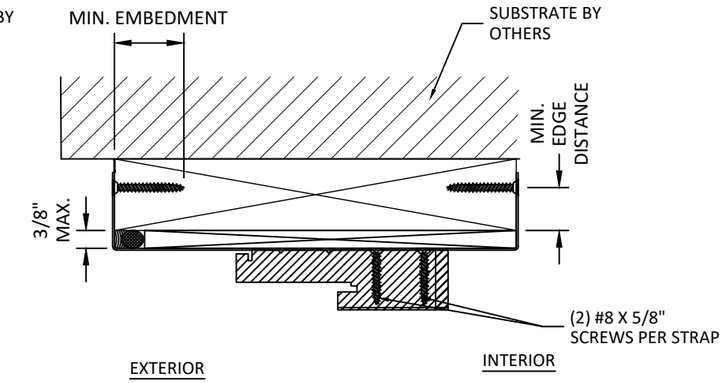

3 / 8.0 VERTICAL SECTION
DOOR HEAD OR JAMB OR SILL
STRAP

INSTALLATION NOTES:

1. *ONE* (1) INSTALLATION ANCHOR IS REQUIRED AT EACH ANCHOR LOCATION SHOWN, UNLESS OTHERWISE STATED.
2. THE NUMBER OF INSTALLATION ANCHORS DEPICTED IS THE MINIMUM NUMBER OF ANCHORS TO BE USED FOR PRODUCT INSTALLATION.
3. INSTALL INDIVIDUAL INSTALLATION ANCHORS WITHIN A TOLERANCE OF ±1/2 INCH OF THE DEPICTED LOCATION IN THE ANCHOR LAYOUT DETAIL (I.E., WITHOUT CONSIDERATION OF TOLERANCES). TOLERANCES ARE NOT CUMULATIVE FROM ONE INSTALLATION ANCHOR TO THE NEXT.
4. FOR MASONRY OR CONCRETE OPENINGS A 1X WOOD BUCK MAY BE USED (OPTIONAL) AS LONG AS THE MINIMUM EMBEDMENT AND EDGE DISTANCE REQUIREMENTS ARE STILL MET WITHIN THE CORRESPONDING HOST SUBSTRATE. SEE GENERAL NOTE #3 ON SHEET 1 FOR MORE INFORMATION.
5. MINIMUM EMBEDMENT AND EDGE DISTANCE EXCLUDE WALL FINISHES, INCLUDING BUT NOT LIMITED TO STUCCO, FOAM, BRICK VENEER, AND SIDING.
6. INSTALLATION ANCHORS AND ASSOCIATED HARDWARE MUST BE MADE OF CORROSION RESISTANT MATERIAL OR HAVE A CORROSION RESISTANT COATING.
7. FOR HOLLOW BLOCK AND GROUT FILLED BLOCK, DO NOT INSTALL INSTALLATION ANCHORS INTO MORTAR JOINTS. EDGE DISTANCE IS MEASURED FROM FREE EDGE OF BLOCK OR EDGE OF MORTAR JOINT INTO FACE SHELL OF BLOCK.
8. INSTALLATION ANCHORS SHALL BE INSTALLED IN ACCORDANCE WITH ANCHOR MANUFACTURER'S INSTALLATION INSTRUCTIONS, AND ANCHORS SHALL NOT BE USED IN SUBSTRATES WITH STRENGTHS LESS THAN THE MINIMUM STRENGTH SPECIFIED BY THE ANCHOR MANUFACTURER.
9. INSTALLATION ANCHOR CAPACITIES FOR PRODUCTS HEREIN ARE BASED ON SUBSTRATE MATERIALS WITH THE FOLLOWING PROPERTIES:
   A. WOOD - MINIMUM SPECIFIC GRAVITY OF 0.55.
   B. CONCRETE - MINIMUM COMPRESSIVE STRENGTH OF 3000 PSI.
   C. MASONRY - MINIMUM COMPRESSIVE STRENGTH OF 2000 PSI.
   D. STEEL - MINIMUM YIELD STRENGTH OF 33 KSI. MINIMUM WALL THICKNESS OF 33 MILS (20 GAUGE).
   E. ALUMINUM - MINIMUM 6063-T5 ALLOY. MINIMUM WALL THICKNESS OF 1/8".

ANCHOR SCHEDULE

METHOD	SUBSTRATE	ANCHOR SCHEDULE	MIN EMBEDMENT	MIN. EDGE DISTANCE
THROUGH FRAME	WOOD: MIN. SG = 0.55	#12 WOOD SCREW	1.5"	0.75"
	METAL: 18 GAUGE , MIN. Fy=33KSI	#14 TEK SCREW	3 THREADS MIN PENETRATION BEYOND METAL	0.75"
	CONCRETE: f'c = 3000PSI	1/4" ITW TAPCON	1.75"	1"
	MASONRY: CMU per ASTM C90 f'c = 2000PSI	1/4" ITW TAPCON	1.75"	2.5"
STRAP ANCHOR	WOOD: MIN. SG = 0.55	#8 WOOD SCREW	1.5"	0.75"
	METAL: 18 GAUGE , MIN. Fy=33KSI	#14 TEK SCREW	3 THREADS MIN PENETRATION BEYOND METAL	0.75"
ALUMINUM NAIL FIN	WOOD: MIN. SG = 0.55	#8 WOOD SCREW	1.5"	0.75"
	METAL: 18 GAUGE Steel, MIN. Fy=33KSI	#8 TEK SCREW	3 THREADS MIN PENETRATION BEYOND METAL	0.75"
STRIKE PLATES	SEE SECTIONS 6 & 7 FOR QUANTITIES OF INSTALLATION ANCHORS AS MENTIONED ABOVE			
HINGES	2 ANCHORS PER HINGE SEE SECTIONS 6 & 7			

Andersen AW WINDOWS • DOORS
100 FOURTH AVE. NORTH
BAYPORT, MN 55003-1096
PH: (651) 264-5150 FX: (651) 264-5485

TITLE: *E-SERIES HINGED PATIO DOOR - OUTSWING (WZ3)(IMPACT)*
ANCHOR DETAILS, SCHEDULE & NOTES

PREPARED BY:
BUILDING DROPS, INC.
398 E. DANIA BEACH BLVD., STE. 338
DANIA BEACH, FL 33004
PH: (954)399-8478
FAX: (954)744.4738
WEB: www.buildingdrops.com

REMARKS	BY	DATE
FBC 17TH EDITION UPDATE	HR	7.2.18
ADDED ZERO, $\frac{1}{2}$", & 1" MULL	HR	4.12.19
ADDED 3/4" X 5-3/16" MULL & DP CHARTS	LL	8.2.19

THE INSTALLATION DETAILS DESCRIBED HEREIN ARE GENERIC AND MAY NOT REFLECT ACTUAL CONDITIONS FOR A SPECIFIC SITE. IF SITE CONDITIONS CAUSE INSTALLATION TO DEVIATE FROM THE REQUIREMENTS DETAILED HEREIN, A LICENSED ENGINEER OR ARCHITECT SHALL PREPARE SITE SPECIFIC DOCUMENTS FOR USE WITH THIS DOCUMENT.

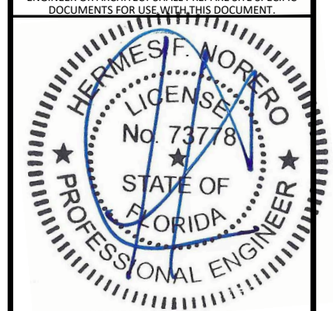

HERMES F. NORERO, P.E.
FLORIDA P.E. No 73778
BUILDING DROPS, INC
398 E. DANIA BEACH BLVD. # 338
DANIA BEACH, FL 33004
FBPE CERT. OF AUTHORIZATION No. 29578

FL #: FL25570
DATE: 10.02.17
DWG. BY: HR
CHK. BY: HFN
SCALE: NTS
DWG. #: AWD231
SECTION 8.0

8/14/2019 6:51 PM
s:\projects\andersen windows\fbc-19-0548.2 - fbc submittal - e-series mullion revisions\dwgs\f25570.1, .2, .3 & .4\awd231 - fl15254.1-impact - non hvhz new format.dwg

MAXIMUM DESIGN PRESSURE CAPACITY CHART (PSF)
ZERO STRUCTURAL MULLION (ONE-WAY) CONFIGURATION

L - Mull Length (in)	W - Tributary Width (in)														
	24.0	***36.0***	***48.0***	***60.0***	***72.0***	***84.0***	***96.0***	***108.0***	***120.0***	***132.0***	***144.0***	***156.0***	***168.0***	***180.0***	***192.0***
24.0	75.00	75.00	75.00	75.00	75.00	75.00	75.00	75.00	75.00	75.00	75.00	75.00	75.00	75.00	75.00
30.0	75.00	75.00	75.00	75.00	75.00	75.00	75.00	75.00	75.00	75.00	75.00	75.00	75.00	75.00	75.00
36.0	75.00	75.00	75.00	75.00	75.00	75.00	75.00	75.00	75.00	75.00	75.00	75.00	75.00	75.00	75.00
42.0	74.96	59.00	57.29	57.29	57.29	57.29	57.29	57.29	57.29	57.29	57.29	57.29	57.29	57.29	57.29
48.0	55.80	41.97	38.38	38.38	38.38	38.38	38.38	38.38	38.38	38.38	38.38	38.38	38.38	38.38	38.38
54.0	43.27	31.62	27.44	26.95	26.95	26.95	26.95	26.95	26.95	26.95	26.95	26.95	26.95	26.95	26.95
60.0	34.59	24.80	20.81	19.65	19.65	19.65	19.65	19.65	19.65	19.65	19.65	19.65	19.65	19.65	19.65
66.0	28.31	20.02	16.42	14.94	14.76	14.76	14.76	14.76	14.76	14.76	14.76	14.76	14.76	14.76	14.76
72.0	23.62	16.53	13.34	11.84	11.37	11.37	11.37	11.37	11.37	11.37	11.37	11.37	11.37	11.37	11.37
78.0	20.01	13.90	11.08	9.65	9.02	8.94	8.94	8.94	8.94	8.94	8.94	8.94	8.94	8.94	8.94
84.0	17.18	11.86	9.37	8.05	7.38	7.16	7.16	7.16	7.16	7.16	7.16	7.16	7.16	7.16	7.16
90.0	14.91	10.25	8.04	6.83	6.17	5.86	5.82	5.82	5.82	5.82	5.82	5.82	5.82	5.82	5.82
96.0	13.07	8.95	6.98	5.88	5.25	4.91	4.80	4.80	4.80	4.80	4.80	4.80	4.80	4.80	4.80
102.0	11.55	7.88	6.12	5.12	4.53	4.18	4.02	4.00	4.00	4.00	4.00	4.00	4.00	4.00	4.00
108.0	10.28	7.00	5.41	4.50	3.95	3.62	3.43	3.37	3.37	3.37	3.37	3.37	3.37	3.37	3.37
114.0	9.21	6.26	4.82	4.00	3.49	3.16	2.97	2.88	2.86	2.86	2.86	2.86	2.86	2.86	2.86
120.0	8.30	5.63	4.32	3.57	3.10	2.79	2.60	2.49	2.46	2.46	2.46	2.46	2.46	2.46	2.46
126.0	7.52	5.09	3.90	3.21	2.78	2.49	2.30	2.19	2.13	2.12	2.12	2.12	2.12	2.12	2.12
132.0	6.84	4.63	3.54	2.91	2.50	2.23	2.05	1.94	1.87	1.85	1.85	1.85	1.85	1.85	1.85
138.0	6.26	4.22	3.23	2.64	2.27	2.02	1.84	1.73	1.66	1.62	1.61	1.61	1.61	1.61	1.61
144.0	5.74	3.87	2.95	2.41	2.07	1.83	1.67	1.55	1.48	1.44	1.42	1.42	1.42	1.42	1.42
150.0	5.29	3.56	2.71	2.21	1.89	1.67	1.52	1.41	1.33	1.28	1.26	1.26	1.26	1.26	1.26
156.0	4.88	3.29	2.50	2.04	1.74	1.53	1.39	1.28	1.21	1.16	1.13	1.12	1.12	1.12	1.12
162.0	4.53	3.05	2.31	1.88	1.60	1.41	1.27	1.17	1.10	1.05	1.02	1.00	1.00	1.00	1.00
168.0	4.21	2.83	2.15	1.75	1.48	1.30	1.17	1.08	1.01	0.96	0.92	0.90	0.90	0.90	0.90
174.0	3.92	2.63	2.00	1.62	1.38	1.21	1.08	0.99	0.93	0.88	0.84	0.82	0.81	0.81	0.81
180.0	3.66	2.46	1.86	1.51	1.28	1.12	1.00	0.92	0.85	0.81	0.77	0.75	0.73	0.73	0.73
186.0	3.43	2.30	1.74	1.41	1.20	1.04	0.93	0.85	0.79	0.74	0.71	0.68	0.67	0.66	0.66
192.0	3.22	2.16	1.63	1.32	1.12	0.98	0.87	0.79	0.73	0.69	0.66	0.63	0.61	0.60	0.60

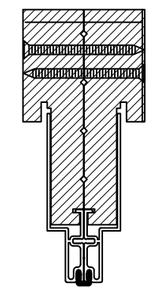

ZERO MULLION

NOTE:

1) **MULLION CHART APPLIES TO ZERO MULL ASSEMBLIES, WHEN MULLED IN ONE-WAY CONFIGURATIONS.**
2) **DESIGN PRESSURE VALUES ARE POSITIVE AND NEGATIVE IN PSF.**
3) **MAXIMUM DEFLECTION HAS BEEN LIMITED TO L/175.**
4) **DESIGN PRESSURE OF ASSEMBLY IS LIMITED TO THE LESSER DESIGN PRESSURE OF THE MULLION ASSEMBLY OR THE INDIVIDUAL UNIT OF INSTALLATION. ADJACENT WINDOWS OR DOORS SHALL BE UNDER SEPARATE FL OR MIAMI-DADE APPROVAL.**
5) **MULLION CHART APPLIES TO THE FOLLOWING INSTALLATION CONDITIONS AS LISTED ON SECTION 8.**
6) **TRIBUTARY WIDTH = W = (A+B)/2**
7) **WHEN PRODUCTS ARE STACKED VERTICALLY, THE MANUFACTURER/INSTALLER SHALL ENSURE THAT THE WEIGHT OF UNITS ABOVE WILL NOT CAUSE DEFLECTIONS OR STRESSES WHICH WILL AFFECT OPERATION OR STRUCTURAL ADEQUACY OF UNITS BELOW.**

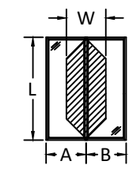

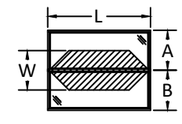

$$\frac{A + B}{2} = W$$

Andersen AW WINDOWS • DOORS
100 FOURTH AVE. NORTH
BAYPORT, MN 55003-1096
PH: (651) 264-5150 FX: (651) 264-5485

TITLE: *E-SERIES HINGED PATIO DOOR - OUTSWING (WZ3)(IMPACT)*

ZERO MULLION LOADS TABLE - ONE WAY

PREPARED BY:
BUILDING DROPS, INC.
398 E. DANIA BEACH BLVD., STE. 338
DANIA BEACH, FL 33004
PH: (954)399-8478
FAX: (954)744.4738
WEB: www.buildingdrops.com

REMARKS	BY	DATE
FBC 17TH EDITION UPDATE	HR	7.2.18
ADDED ZERO, $\frac{1}{2}$", & 1" MULL	HR	4.12.19
ADDED 3/4" X 5-3/16" MULL & DP CHARTS	LL	8.2.19

THE INSTALLATION DETAILS DESCRIBED HEREIN ARE GENERIC AND MAY NOT REFLECT ACTUAL CONDITIONS FOR A SPECIFIC SITE. IF SITE CONDITIONS CAUSE INSTALLATION TO DEVIATE FROM THE REQUIREMENTS DETAILED HEREIN, A LICENSED ENGINEER OR ARCHITECT SHALL PREPARE SITE SPECIFIC DOCUMENTS FOR USE WITH THIS DOCUMENT.

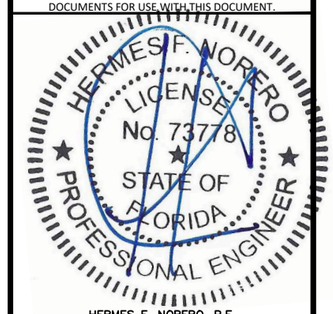

HERMES F. NORERO, P.E.
FLORIDA P.E. No 73778
BUILDING DROPS, INC
398 E. DANIA BEACH BLVD. # 338
DANIA BEACH, FL 33004
FBPE CERT. OF AUTHORIZATION No. 29578

FL #: FL25570

DATE: 10.02.17

DWG. BY: HR | CHK. BY: HFN

SCALE: NTS

DWG. #: AWD231

SECTION 9.0

8/14/2019 6:51 PM
s:\projects\andersen windows\fbc-19-0548.2 - fbc submittal - e-series mullion revisions\dwgs\fl25570.1, .2, .3, & .4\awd231 - fl15254.1-impact - non hvhz new format.dwg

8/14/2019 6:51 PM
s:\projects\andersen windows\fbc-19-0548.2 - fbc submittal - e-series mullion revisions\dwgs\fl25570.1, .2, .3, & .4\awd231 - fl15254.1-impact - non hvhz new format.dwg

MAXIMUM DESIGN PRESSURE CAPACITY CHART (PSF)
ZERO STRUCTURAL MULLION (TWO-WAY) CONFIGURATION

L - Mull Length (in)	W - Tributary Width (in)														
	24.0	***36.0***	***48.0***	***60.0***	***72.0***	***84.0***	***96.0***	***108.0***	***120.0***	***132.0***	***144.0***	***156.0***	***168.0***	***180.0***	***192.0***
24.0	60.00	60.00	60.00	60.00	60.00	58.48	51.17	45.48	40.94	37.21	34.11	31.49	29.24	27.29	25.59
30.0	60.00	60.00	60.00	52.40	43.67	37.43	32.75	29.11	26.20	23.82	21.83	20.15	18.71	17.47	16.37
36.0	60.00	60.00	45.48	36.39	30.32	25.99	22.74	20.22	18.19	16.54	15.16	14.00	13.00	12.13	11.37
42.0	60.00	44.56	33.42	26.73	22.28	19.10	16.71	14.85	13.37	12.15	11.14	10.28	9.55	8.91	8.35
48.0	51.17	34.11	25.59	20.47	17.06	14.62	12.79	11.37	10.23	9.30	8.53	7.87	7.31	6.82	6.40
54.0	40.43	26.95	20.22	16.17	13.48	11.55	10.11	8.98	8.09	7.35	6.74	6.22	5.78	5.39	5.05
60.0	32.75	21.83	16.37	13.10	10.92	9.36	8.19	7.28	6.55	5.95	5.46	5.04	4.68	4.37	4.09
66.0	27.07	18.04	13.53	10.83	9.02	7.73	6.77	6.01	5.41	4.92	4.51	4.16	3.87	3.61	3.38
72.0	22.74	15.16	11.37	9.10	7.58	6.50	5.69	5.05	4.55	4.13	3.79	3.50	3.25	3.03	2.84
78.0	19.38	12.92	9.69	7.75	6.46	5.54	4.84	4.31	3.88	3.52	3.23	2.98	2.77	2.58	2.42
84.0	16.71	11.14	8.35	6.68	5.57	4.77	4.18	3.71	3.34	3.04	2.78	2.57	2.39	2.23	2.09
90.0	14.56	9.70	7.28	5.82	4.85	4.16	3.64	3.23	2.91	2.65	2.43	2.24	2.08	1.94	1.82
96.0	12.79	8.53	6.40	5.12	4.26	3.66	3.20	2.84	2.56	2.33	2.13	1.97	1.83	1.71	1.60
102.0	11.33	7.55	5.67	4.53	3.78	3.24	2.83	2.52	2.27	2.06	1.89	1.74	1.62	1.51	1.42
108.0	10.11	6.74	5.05	4.04	3.37	2.89	2.53	2.25	2.02	1.84	1.68	1.56	1.44	1.35	1.26
114.0	9.07	6.05	4.54	3.63	3.02	2.59	2.27	2.02	1.81	1.65	1.51	1.40	1.30	1.21	1.13
120.0	8.19	5.46	4.09	3.27	2.73	2.34	2.05	1.82	1.64	1.49	1.36	1.26	1.17	1.09	1.02
126.0	7.43	4.95	3.71	2.97	2.48	2.12	1.86	1.65	1.49	1.35	1.24	1.14	1.06	0.99	0.93
132.0	6.77	4.51	3.38	2.71	2.26	1.93	1.69	1.50	1.35	1.23	1.13	1.04	0.97	0.90	0.85
138.0	6.19	4.13	3.10	2.48	2.06	1.77	1.55	1.38	1.24	1.13	1.03	0.95	0.88	0.83	0.77
144.0	5.69	3.79	2.84	2.27	1.90	1.62	1.42	1.26	1.14	1.03	0.95	0.87	0.81	0.76	0.71
150.0	5.24	3.49	2.62	2.10	1.75	1.50	1.31	1.16	1.05	0.95	0.87	0.81	0.75	0.70	0.65
156.0	4.84	3.23	2.42	1.94	1.61	1.38	1.21	1.08	0.97	0.88	0.81	0.75	0.69	0.65	0.61
162.0	4.49	2.99	2.25	1.80	1.50	1.28	1.12	1.00	0.90	0.82	0.75	0.69	0.64	0.60	0.56
168.0	4.18	2.78	2.09	1.67	1.39	1.19	1.04	0.93	0.84	0.76	0.70	0.64	0.60	0.56	0.52
174.0	3.89	2.60	1.95	1.56	1.30	1.11	0.97	0.87	0.78	0.71	0.65	0.60	0.56	0.52	0.49
180.0	3.64	2.43	1.82	1.46	1.21	1.04	0.91	0.81	0.73	0.66	0.61	0.56	0.52	0.49	0.45
186.0	3.41	2.27	1.70	1.36	1.14	0.97	0.85	0.76	0.68	0.62	0.57	0.52	0.49	0.45	0.43
192.0	3.20	2.13	1.60	1.28	1.07	0.91	0.80	0.71	0.64	0.58	0.53	0.49	0.46	0.43	0.40

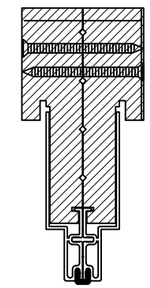

ZERO MULLION

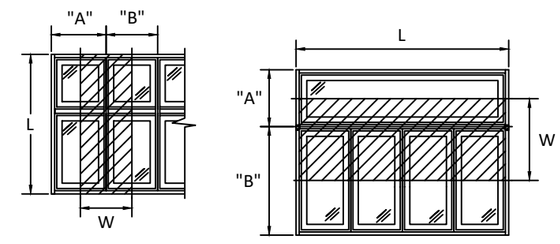

$\frac{A + B = W}{2}$

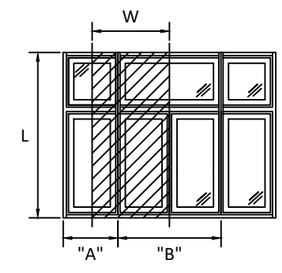

NOTE:

1) **MULLION CHART APPLIES TO ZERO MULL ASSEMBLIES, WHEN MULLED IN TWO-WAY CONFIGURATIONS.**
2) **DESIGN PRESSURE VALUES ARE POSITIVE AND NEGATIVE IN PSF.**
3) **MAXIMUM DEFLECTION HAS BEEN LIMITED TO L/175.**
4) **DESIGN PRESSURE OF ASSEMBLY IS LIMITED TO THE LESSER DESIGN PRESSURE OF THE MULLION ASSEMBLY OR THE INDIVIDUAL UNIT OF INSTALLATION. ADJACENT WINDOWS OR DOORS SHALL BE UNDER SEPARATE FL OR MIAMI-DADE APPROVAL.**
5) **MULLION CHART APPLIES TO THE FOLLOWING INSTALLATION CONDITIONS AS LISTED ON SECTION 8.**
6) **TRIBUTARY WIDTH = W = (A+B)/2**
7) **WHEN PRODUCTS ARE STACKED VERTICALLY, THE MANUFACTURER/INSTALLER SHALL ENSURE THAT THE WEIGHT OF UNITS ABOVE WILL NOT CAUSE DEFLECTIONS OR STRESSES WHICH WILL AFFECT OPERATION OR STRUCTURAL ADEQUACY OF UNITS BELOW.**

Andersen AW WINDOWS • DOORS
100 FOURTH AVE. NORTH
BAYPORT, MN 55003-1096
PH: (651) 264-5150 FX: (651) 264-5485

TITLE: *E-SERIES HINGED PATIO DOOR - OUTSWING (WZ3)(IMPACT)*
ZERO MULLION LOADS TABLE - TWO WAY

PREPARED BY:
BUILDING DROPS, INC.
398 E. DANIA BEACH BLVD., STE. 338
DANIA BEACH, FL 33004
PH: (954)399-8478
FAX: (954)744.4738
WEB: www.buildingdrops.com

REMARKS	BY	DATE
FBC 17TH EDITION UPDATE	HR	7.2.18
ADDED ZERO, $\frac{1}{2}$", & 1" MULL	HR	4.12.19
ADDED 3/4" X 5-3/16" MULL & DP CHARTS	LL	8.2.19

THE INSTALLATION DETAILS DESCRIBED HEREIN ARE GENERIC AND MAY NOT REFLECT ACTUAL CONDITIONS FOR A SPECIFIC SITE. IF SITE CONDITIONS CAUSE INSTALLATION TO DEVIATE FROM THE REQUIREMENTS DETAILED HEREIN, A LICENSED ENGINEER OR ARCHITECT SHALL PREPARE SITE SPECIFIC DOCUMENTS FOR USE WITH THIS DOCUMENT.

HERMES F. NORERO LICENSE No. 73778 STATE OF FLORIDA PROFESSIONAL ENGINEER

HERMES F. NORERO, P.E.
FLORIDA P.E. No 73778
BUILDING DROPS, INC
398 E. DANIA BEACH BLVD. # 338
DANIA BEACH, FL 33004
FBPE CERT. OF AUTHORIZATION No. 29578

FL #: FL25570
DATE: 10.02.17
DWG. BY: HR
CHK. BY: HFN
SCALE: NTS
DWG. #: AWD231
SECTION 9.1

MAXIMUM DESIGN PRESSURE CAPACITY CHART (PSF)
1/2" X 5-3/16" STRUCTURAL MULLION (ONE-WAY) CONFIGURATION

L - Mull Length (in)	W - Tributary Width (in)														
	24.0	***36.0***	***48.0***	***60.0***	***72.0***	***84.0***	***96.0***	***108.0***	***120.0***	***132.0***	***144.0***	***156.0***	***168.0***	***180.0***	***192.0***
24.0	75.00	75.00	75.00	75.00	75.00	75.00	75.00	75.00	75.00	75.00	75.00	75.00	75.00	75.00	75.00
30.0	75.00	75.00	75.00	75.00	75.00	75.00	75.00	75.00	75.00	75.00	75.00	75.00	75.00	75.00	75.00
36.0	75.00	75.00	75.00	75.00	75.00	75.00	75.00	75.00	75.00	75.00	75.00	75.00	75.00	75.00	75.00
42.0	75.00	75.00	75.00	75.00	75.00	75.00	75.00	75.00	75.00	75.00	75.00	75.00	75.00	75.00	75.00
48.0	75.00	75.00	75.00	75.00	75.00	75.00	75.00	75.00	75.00	75.00	75.00	75.00	75.00	75.00	75.00
54.0	75.00	75.00	75.00	75.00	75.00	75.00	75.00	75.00	75.00	75.00	75.00	75.00	75.00	75.00	75.00
60.0	75.00	75.00	75.00	75.00	75.00	75.00	75.00	75.00	75.00	75.00	75.00	75.00	75.00	75.00	75.00
66.0	75.00	75.00	75.00	75.00	75.00	75.00	75.00	75.00	75.00	75.00	75.00	75.00	75.00	75.00	75.00
72.0	75.00	75.00	74.27	65.89	63.31	63.31	63.31	63.31	63.31	63.31	63.31	63.31	63.31	63.31	63.31
78.0	75.00	75.00	61.70	53.74	50.24	49.79	49.79	49.79	49.79	49.79	49.79	49.79	49.79	49.79	49.79
84.0	75.00	66.05	52.17	44.81	41.06	39.87	39.87	39.87	39.87	39.87	39.87	39.87	39.87	39.87	39.87
90.0	75.00	57.06	44.74	38.03	34.33	32.63	32.41	32.41	32.41	32.41	32.41	32.41	32.41	32.41	32.41
96.0	72.76	49.82	38.83	32.73	29.21	27.32	26.71	26.71	26.71	26.71	26.71	26.71	26.71	26.71	26.71
102.0	64.30	43.88	34.05	28.51	25.20	23.29	22.38	22.27	22.27	22.27	22.27	22.27	22.27	22.27	22.27
108.0	54.65	37.39	29.06	24.35	21.51	19.81	18.91	18.61	18.61	18.61	18.61	18.61	18.61	18.61	18.61
114.0	46.37	31.64	24.50	20.43	17.93	16.38	15.47	15.05	14.99	14.99	14.99	14.99	14.99	14.99	14.99
120.0	39.68	27.02	20.86	17.32	15.12	13.71	12.85	12.37	12.21	12.21	12.21	12.21	12.21	12.21	12.21
126.0	34.22	23.26	17.91	14.82	12.87	11.61	10.80	10.31	10.08	10.04	10.04	10.04	10.04	10.04	10.04
132.0	29.72	20.17	15.49	12.78	11.06	9.92	9.17	8.70	8.43	8.34	8.34	8.34	8.34	8.34	8.34
138.0	25.98	17.60	13.50	11.10	9.58	8.56	7.87	7.41	7.14	7.00	6.98	6.98	6.98	6.98	6.98
144.0	22.84	15.46	11.83	9.71	8.35	7.44	6.81	6.38	6.10	5.94	5.89	5.89	5.89	5.89	5.89
150.0	20.19	13.65	10.43	8.54	7.33	6.50	5.93	5.53	5.26	5.10	5.01	5.00	5.00	5.00	5.00
156.0	17.94	12.11	9.24	7.56	6.47	5.73	5.20	4.83	4.57	4.41	4.31	4.27	4.27	4.27	4.27
162.0	16.00	10.79	8.23	6.72	5.74	5.07	4.59	4.25	4.01	3.84	3.74	3.68	3.68	3.68	3.68
168.0	14.34	9.66	7.36	6.00	5.12	4.51	4.07	3.76	3.53	3.37	3.26	3.20	3.18	3.18	3.18
174.0	12.90	8.69	6.61	5.38	4.58	4.03	3.63	3.34	3.13	2.97	2.87	2.80	2.77	2.76	2.76
180.0	11.65	7.84	5.96	4.85	4.12	3.62	3.25	2.99	2.79	2.64	2.54	2.47	2.43	2.41	2.41
186.0	10.55	7.10	5.39	4.38	3.72	3.26	2.93	2.68	2.50	2.36	2.26	2.19	2.14	2.12	2.12
192.0	9.59	6.45	4.89	3.97	3.37	2.95	2.64	2.42	2.24	2.11	2.02	1.95	1.90	1.87	1.86

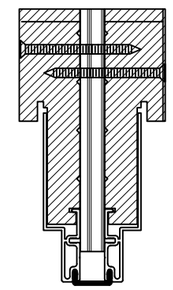

1/2" X 5 3/16" MULLION

NOTE:

1) **MULLION CHART APPLIES TO 1/2" X 5-3/16" MULL ASSEMBLIES, WHEN MULLED IN ONE-WAY CONFIGURATIONS.**
2) **DESIGN PRESSURE VALUES ARE POSITIVE AND NEGATIVE IN PSF.**
3) **MAXIMUM DEFLECTION HAS BEEN LIMITED TO L/175.**
4) **DESIGN PRESSURE OF ASSEMBLY IS LIMITED TO THE LESSER DESIGN PRESSURE OF THE MULLION ASSEMBLY OR THE INDIVIDUAL UNIT OF INSTALLATION. ADJACENT WINDOWS OR DOORS SHALL BE UNDER SEPARATE FL OR MIAMI-DADE APPROVAL.**
5) **MULLION CHART APPLIES TO THE FOLLOWING INSTALLATION CONDITIONS AS LISTED ON SECTION 8.**

6) TRIBUTARY WIDTH = W = (A+B)/2

7) WHEN PRODUCTS ARE STACKED VERTICALLY, THE MANUFACTURER/INSTALLER SHALL ENSURE THAT THE WEIGHT OF UNITS ABOVE WILL NOT CAUSE DEFLECTIONS OR STRESSES WHICH WILL AFFECT OPERATION OR STRUCTURAL ADEQUACY OF UNITS BELOW.

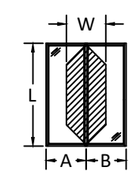

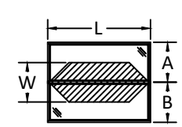

$$\frac{A + B = W}{2}$$

Andersen AW WINDOWS • DOORS
100 FOURTH AVE. NORTH
BAYPORT, MN 55003-1096
PH: (651) 264-5150 FX: (651) 264-5485

TITLE: *E-SERIES HINGED PATIO DOOR - OUTSWING (WZ3)(IMPACT)*

1/2" MULLION LOADS TABLE - ONE WAY

PREPARED BY:
BUILDING DROPS, INC.
398 E. DANIA BEACH BLVD., STE. 338
DANIA BEACH, FL 33004
PH: (954)399-8478
FAX: (954)744.4738
WEB: www.buildingdrops.com

REMARKS	BY	DATE
FBC 17TH EDITION UPDATE	HR	7.2.18
ADDED ZERO, $\frac{1}{2}$", & 1" MULL	HR	4.12.19
ADDED 3/4" X 5-3/16" MULL & DP CHARTS	LL	8.2.19

THE INSTALLATION DETAILS DESCRIBED HEREIN ARE GENERIC AND MAY NOT REFLECT ACTUAL CONDITIONS FOR A SPECIFIC SITE. IF SITE CONDITIONS CAUSE INSTALLATION TO DEVIATE FROM THE REQUIREMENTS DETAILED HEREIN, A LICENSED ENGINEER OR ARCHITECT SHALL PREPARE SITE SPECIFIC DOCUMENTS FOR USE WITH THIS DOCUMENT.

HERMES F. NORERO LICENSE No. 73778 STATE OF FLORIDA PROFESSIONAL ENGINEER

HERMES F. NORERO, P.E.
FLORIDA P.E. No 73778
BUILDING DROPS, INC
398 E. DANIA BEACH BLVD. # 338
DANIA BEACH, FL 33004
FBPE CERT. OF AUTHORIZATION No. 29578

FL #: FL25570

DATE: 10.02.17

DWG. BY: HR | CHK. BY: HFN

SCALE: NTS

DWG. #: AWD231

SECTION 9.2

8/14/2019 6:51 PM
s:\projects\andersen windows\fbc-19-0548.2 - fbc submittal - e-series mullion revisions\dwgs\fl25570.1, .2, .3, & .4\awd231 - fl15254.1-impact - non hvhz new format.dwg

MAXIMUM DESIGN PRESSURE CAPACITY CHART (PSF)
1/2" X 5-3/16" STRUCTURAL MULLION (TWO-WAY) CONFIGURATION

L - Mull Length (in)	W - Tributary Width (in)														
	24.0	***36.0***	***48.0***	***60.0***	***72.0***	***84.0***	***96.0***	***108.0***	***120.0***	***132.0***	***144.0***	***156.0***	***168.0***	***180.0***	***192.0***
24.0	60.00	60.00	60.00	60.00	60.00	60.00	60.00	60.00	60.00	60.00	60.00	60.00	60.00	59.47	55.75
30.0	60.00	60.00	60.00	60.00	60.00	60.00	60.00	60.00	60.00	60.00	59.47	54.89	50.97	47.57	44.60
36.0	60.00	60.00	60.00	60.00	60.00	60.00	60.00	60.00	59.47	54.06	49.56	45.74	42.48	39.64	37.17
42.0	60.00	60.00	60.00	60.00	60.00	60.00	60.00	56.63	50.97	46.34	42.48	39.21	36.41	33.98	31.86
48.0	60.00	60.00	60.00	60.00	60.00	60.00	55.75	49.56	44.60	40.55	37.17	34.31	31.86	29.73	27.88
54.0	60.00	60.00	60.00	60.00	60.00	56.63	49.56	44.05	39.64	36.04	33.04	30.50	28.32	26.43	24.78
60.0	60.00	60.00	60.00	60.00	59.47	50.97	44.60	39.64	35.68	32.44	29.73	27.45	25.49	23.79	22.30
66.0	60.00	60.00	60.00	60.00	52.37	44.89	39.28	34.92	31.42	28.57	26.19	24.17	22.45	20.95	19.64
72.0	60.00	60.00	60.00	52.81	44.01	37.72	33.01	29.34	26.40	24.00	22.00	20.31	18.86	17.60	16.50
78.0	60.00	60.00	56.25	45.00	37.50	32.14	28.12	25.00	22.50	20.45	18.75	17.31	16.07	15.00	14.06
84.0	60.00	60.00	48.50	38.80	32.33	27.71	24.25	21.55	19.40	17.64	16.17	14.92	13.86	12.93	12.12
90.0	60.00	56.33	42.25	33.80	28.16	24.14	21.12	18.78	16.90	15.36	14.08	13.00	12.07	11.27	10.56
96.0	60.00	49.51	37.13	29.71	24.75	21.22	18.57	16.50	14.85	13.50	12.38	11.43	10.61	9.90	9.28
102.0	60.00	43.86	32.89	26.31	21.93	18.80	16.45	14.62	13.16	11.96	10.96	10.12	9.40	8.77	8.22
108.0	55.88	37.26	27.94	22.35	18.63	15.97	13.97	12.42	11.18	10.16	9.31	8.60	7.98	7.45	6.99
114.0	47.52	31.68	23.76	19.01	15.84	13.58	11.88	10.56	9.50	8.64	7.92	7.31	6.79	6.34	5.94
120.0	40.74	27.16	20.37	16.30	13.58	11.64	10.18	9.05	8.15	7.41	6.79	6.27	5.82	5.43	5.09
126.0	35.19	23.46	17.60	14.08	11.73	10.05	8.80	7.82	7.04	6.40	5.87	5.41	5.03	4.69	4.40
132.0	30.61	20.40	15.30	12.24	10.20	8.74	7.65	6.80	6.12	5.56	5.10	4.71	4.37	4.08	3.83
138.0	26.79	17.86	13.39	10.71	8.93	7.65	6.70	5.95	5.36	4.87	4.46	4.12	3.83	3.57	3.35
144.0	23.58	15.72	11.79	9.43	7.86	6.74	5.89	5.24	4.72	4.29	3.93	3.63	3.37	3.14	2.95
150.0	20.86	13.91	10.43	8.34	6.95	5.96	5.21	4.64	4.17	3.79	3.48	3.21	2.98	2.78	2.61
156.0	18.54	12.36	9.27	7.42	6.18	5.30	4.64	4.12	3.71	3.37	3.09	2.85	2.65	2.47	2.32
162.0	16.56	11.04	8.28	6.62	5.52	4.73	4.14	3.68	3.31	3.01	2.76	2.55	2.37	2.21	2.07
168.0	14.85	9.90	7.42	5.94	4.95	4.24	3.71	3.30	2.97	2.70	2.47	2.28	2.12	1.98	1.86
174.0	13.36	8.91	6.68	5.35	4.45	3.82	3.34	2.97	2.67	2.43	2.23	2.06	1.91	1.78	1.67
180.0	12.07	8.05	6.04	4.83	4.02	3.45	3.02	2.68	2.41	2.19	2.01	1.86	1.72	1.61	1.51
186.0	10.94	7.29	5.47	4.38	3.65	3.13	2.73	2.43	2.19	1.99	1.82	1.68	1.56	1.46	1.37
192.0	9.95	6.63	4.97	3.98	3.32	2.84	2.49	2.21	1.99	1.81	1.66	1.53	1.42	1.33	1.24

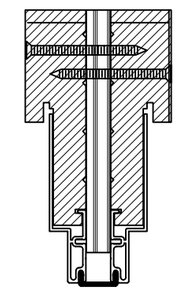

1/2" X 5 3/16" MULLION

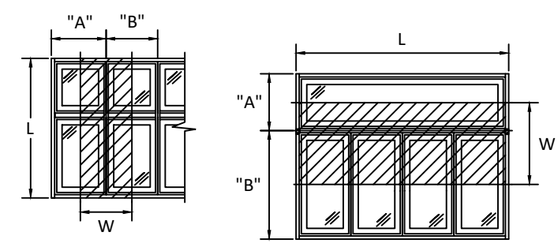

$\frac{A + B = W}{2}$

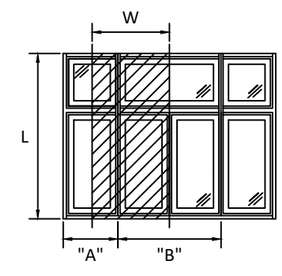

NOTE:

1) **MULLION CHART APPLIES TO 1/2" X 5-3/16" MULL ASSEMBLIES, WHEN MULLED IN TWO-WAY CONFIGURATIONS.**
2) **DESIGN PRESSURE VALUES ARE POSITIVE AND NEGATIVE IN PSF.**
3) **MAXIMUM DEFLECTION HAS BEEN LIMITED TO L/175.**
4) **DESIGN PRESSURE OF ASSEMBLY IS LIMITED TO THE LESSER DESIGN PRESSURE OF THE MULLION ASSEMBLY OR THE INDIVIDUAL UNIT OF INSTALLATION. ADJACENT WINDOWS OR DOORS SHALL BE UNDER SEPARATE FL OR MIAMI-DADE APPROVAL.**
5) **MULLION CHART APPLIES TO THE FOLLOWING INSTALLATION CONDITIONS AS LISTED ON SECTION 8.**
6) **TRIBUTARY WIDTH = W = (A+B)/2**
7) **WHEN PRODUCTS ARE STACKED VERTICALLY, THE MANUFACTURER/INSTALLER SHALL ENSURE THAT THE WEIGHT OF UNITS ABOVE WILL NOT CAUSE DEFLECTIONS OR STRESSES WHICH WILL AFFECT OPERATION OR STRUCTURAL ADEQUACY OF UNITS BELOW.**

Andersen AW WINDOWS • DOORS
100 FOURTH AVE. NORTH
BAYPORT, MN 55003-1096
PH: (651) 264-5150 FX: (651) 264-5485

TITLE: *E-SERIES HINGED PATIO DOOR - OUTSWING (WZ3)(IMPACT)*
1/2" MULLION LOADS TABLE - TWO WAY

PREPARED BY:
BUILDING DROPS, INC.
398 E. DANIA BEACH BLVD., STE. 338
DANIA BEACH, FL 33004
PH: (954)399-8478
FAX: (954)744.4738
WEB: www.buildingdrops.com

REMARKS	BY	DATE
FBC 17TH EDITION UPDATE	HR	7.2.18
ADDED ZERO, $\frac{1}{2}$", & 1" MULL	HR	4.12.19
ADDED 3/4" X 5-3/16" MULL & DP CHARTS	LL	8.2.19

THE INSTALLATION DETAILS DESCRIBED HEREIN ARE GENERIC AND MAY NOT REFLECT ACTUAL CONDITIONS FOR A SPECIFIC SITE. IF SITE CONDITIONS CAUSE INSTALLATION TO DEVIATE FROM THE REQUIREMENTS DETAILED HEREIN, A LICENSED ENGINEER OR ARCHITECT SHALL PREPARE SITE SPECIFIC DOCUMENTS FOR USE WITH THIS DOCUMENT.

HERMES F. NORERO
LICENSE No. 73778
STATE OF FLORIDA
PROFESSIONAL ENGINEER

HERMES F. NORERO, P.E.
FLORIDA P.E. No 73778
BUILDING DROPS, INC
398 E. DANIA BEACH BLVD. # 338
DANIA BEACH, FL 33004
FBPE CERT. OF AUTHORIZATION No. 29578

FL #: FL25570
DATE: 10.02.17
DWG. BY: HR
CHK. BY: HFN
SCALE: NTS
DWG. #: AWD231
SECTION 9.3

8/14/2019 6:51 PM
s:\projects\andersen windows\fbc-19-0548.2 - fbc submittal - e-series mullion revisions\dwgs\fl25570.1, .2, .3, & .4\awd231 - fl15254.1-impact - non hvhz new format.dwg

MAXIMUM DESIGN PRESSURE CAPACITY CHART (PSF)
3/4" X 5-3/16" STRUCTURAL MULLION (ONE-WAY) CONFIGURATION

L - Mull Length (in)	W - Tributary Width (in)														
	24.0	***36.0***	***48.0***	***60.0***	***72.0***	***84.0***	***96.0***	***108.0***	***120.0***	***132.0***	***144.0***	***156.0***	***168.0***	***180.0***	***192.0***
24.0	75.00	75.00	75.00	75.00	75.00	75.00	75.00	75.00	75.00	75.00	75.00	75.00	75.00	75.00	75.00
30.0	75.00	75.00	75.00	75.00	75.00	75.00	75.00	75.00	75.00	75.00	75.00	75.00	75.00	75.00	75.00
36.0	75.00	75.00	75.00	75.00	75.00	75.00	75.00	75.00	75.00	75.00	75.00	75.00	75.00	75.00	75.00
42.0	75.00	75.00	75.00	75.00	75.00	75.00	75.00	75.00	75.00	75.00	75.00	75.00	75.00	75.00	75.00
48.0	75.00	75.00	75.00	75.00	75.00	75.00	75.00	75.00	75.00	75.00	75.00	75.00	75.00	75.00	75.00
54.0	75.00	75.00	75.00	75.00	75.00	75.00	75.00	75.00	75.00	75.00	75.00	75.00	75.00	75.00	75.00
60.0	75.00	75.00	75.00	75.00	75.00	75.00	75.00	75.00	75.00	75.00	75.00	75.00	75.00	75.00	75.00
66.0	75.00	75.00	75.00	75.00	75.00	75.00	75.00	75.00	75.00	75.00	75.00	75.00	75.00	75.00	75.00
72.0	75.00	75.00	75.00	75.00	74.88	74.88	74.88	74.88	74.88	74.88	74.88	74.88	74.88	74.88	74.88
78.0	75.00	75.00	72.98	63.56	59.42	58.90	58.90	58.90	58.90	58.90	58.90	58.90	58.90	58.90	58.90
84.0	75.00	75.00	61.70	53.00	48.57	47.16	47.16	47.16	47.16	47.16	47.16	47.16	47.16	47.16	47.16
90.0	75.00	67.49	52.92	44.98	40.60	38.60	38.34	38.34	38.34	38.34	38.34	38.34	38.34	38.34	38.34
96.0	75.00	58.92	45.93	38.72	34.55	32.32	31.59	31.59	31.59	31.59	31.59	31.59	31.59	31.59	31.59
102.0	75.00	51.91	40.27	33.72	29.81	27.54	26.48	26.34	26.34	26.34	26.34	26.34	26.34	26.34	26.34
108.0	64.64	44.22	34.37	28.80	25.44	23.44	22.37	22.01	22.01	22.01	22.01	22.01	22.01	22.01	22.01
114.0	54.84	37.42	28.98	24.16	21.21	19.37	18.30	17.80	17.73	17.73	17.73	17.73	17.73	17.73	17.73
120.0	46.94	31.96	24.67	20.48	17.88	16.22	15.19	14.63	14.44	14.44	14.44	14.44	14.44	14.44	14.44
126.0	40.48	27.51	21.18	17.53	15.23	13.73	12.77	12.20	11.92	11.88	11.88	11.88	11.88	11.88	11.88
132.0	35.16	23.85	18.32	15.12	13.08	11.74	10.85	10.29	9.97	9.86	9.86	9.86	9.86	9.86	9.86
138.0	30.73	20.82	15.96	13.13	11.33	10.12	9.31	8.77	8.44	8.28	8.26	8.26	8.26	8.26	8.26
144.0	27.02	18.28	13.99	11.49	9.88	8.79	8.05	7.54	7.22	7.03	6.96	6.96	6.96	6.96	6.96
150.0	23.88	16.14	12.33	10.11	8.67	7.69	7.01	6.54	6.22	6.03	5.93	5.92	5.92	5.92	5.92
156.0	21.22	14.32	10.93	8.94	7.65	6.77	6.15	5.71	5.41	5.21	5.10	5.06	5.06	5.06	5.06
162.0	18.93	12.77	9.73	7.95	6.79	5.99	5.43	5.03	4.74	4.54	4.42	4.36	4.35	4.35	4.35
168.0	16.96	11.43	8.70	7.10	6.05	5.33	4.82	4.44	4.18	3.98	3.86	3.79	3.76	3.76	3.76
174.0	15.26	10.28	7.82	6.37	5.42	4.77	4.30	3.95	3.70	3.52	3.39	3.31	3.27	3.27	3.27
180.0	13.78	9.27	7.05	5.73	4.87	4.28	3.85	3.53	3.30	3.12	3.00	2.92	2.87	2.85	2.85
186.0	12.48	8.39	6.37	5.18	4.40	3.85	3.46	3.17	2.95	2.79	2.67	2.59	2.53	2.51	2.50
192.0	11.34	7.62	5.78	4.70	3.98	3.49	3.13	2.86	2.65	2.50	2.39	2.30	2.25	2.22	2.20

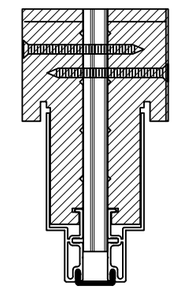

3/4" X 5 3/16" MULLION

NOTE:

1) **MULLION CHART APPLIES TO 3/4" X 5-3/16" MULL ASSEMBLIES, WHEN MULLED IN ONE-WAY CONFIGURATIONS.**
2) **DESIGN PRESSURE VALUES ARE POSITIVE AND NEGATIVE IN PSF.**
3) **MAXIMUM DEFLECTION HAS BEEN LIMITED TO L/175.**
4) **DESIGN PRESSURE OF ASSEMBLY IS LIMITED TO THE LESSER DESIGN PRESSURE OF THE MULLION ASSEMBLY OR THE INDIVIDUAL UNIT OF INSTALLATION. ADJACENT WINDOWS OR DOORS SHALL BE UNDER SEPARATE FL OR MIAMI-DADE APPROVAL.**
5) **MULLION CHART APPLIES TO THE FOLLOWING INSTALLATION CONDITIONS AS LISTED ON SECTION 8.**

6) TRIBUTARY WIDTH = W = (A+B)/2

7) WHEN PRODUCTS ARE STACKED VERTICALLY, THE MANUFACTURER/INSTALLER SHALL ENSURE THAT THE WEIGHT OF UNITS ABOVE WILL NOT CAUSE DEFLECTIONS OR STRESSES WHICH WILL AFFECT OPERATION OR STRUCTURAL ADEQUACY OF UNITS BELOW.

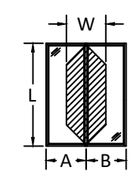

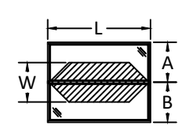

$$\frac{A + B = W}{2}$$

Andersen AW WINDOWS • DOORS

100 FOURTH AVE. NORTH
BAYPORT, MN 55003-1096
PH: (651) 264-5150 FX: (651) 264-5485

TITLE: *E-SERIES HINGED PATIO DOOR - OUTSWING (WZ3)(IMPACT)*

3/4" MULLION LOADS TABLE - ONE WAY

PREPARED BY:
BUILDING DROPS, INC.
398 E. DANIA BEACH BLVD., STE. 338
DANIA BEACH, FL 33004
PH: (954)399-8478
FAX: (954)744.4738
WEB: www.buildingdrops.com

REMARKS	BY	DATE
FBC 17TH EDITION UPDATE	HR	7.2.18
ADDED ZERO, $\frac{1}{2}$", & 1" MULL	HR	4.12.19
ADDED 3/4" X 5-3/16" MULL & DP CHARTS	LL	8.2.19

THE INSTALLATION DETAILS DESCRIBED HEREIN ARE GENERIC AND MAY NOT REFLECT ACTUAL CONDITIONS FOR A SPECIFIC SITE. IF SITE CONDITIONS CAUSE INSTALLATION TO DEVIATE FROM THE REQUIREMENTS DETAILED HEREIN, A LICENSED ENGINEER OR ARCHITECT SHALL PREPARE SITE SPECIFIC DOCUMENTS FOR USE WITH THIS DOCUMENT.

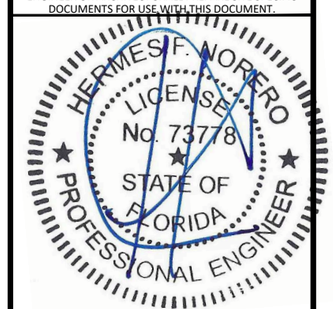

HERMES F. NORERO, P.E.
FLORIDA P.E. No 73778
BUILDING DROPS, INC
398 E. DANIA BEACH BLVD. # 338
DANIA BEACH, FL 33004
FBPE CERT. OF AUTHORIZATION No. 29578

FL #: FL25570

DATE: 10.02.17

DWG. BY: HR | CHK. BY: HFN

SCALE: NTS

DWG. #: AWD231

SECTION 9.4

8/14/2019 6:51 PM
s:\projects\andersen windows\fbc-19-0548.2 - fbc submittal - e-series mullion revisions\dwgs\fl25570.1, .2, .3, & .4\awd231 - fl15254.1-impact - non hvhz new format.dwg

MAXIMUM DESIGN PRESSURE CAPACITY CHART (PSF)
3/4" X 5-3/16" STRUCTURAL MULLION (TWO-WAY) CONFIGURATION

L - Mull Length (in)	W - Tributary Width (in)														
	24.0	***36.0***	***48.0***	***60.0***	***72.0***	***84.0***	***96.0***	***108.0***	***120.0***	***132.0***	***144.0***	***156.0***	***168.0***	***180.0***	***192.0***
24.0	60.00	60.00	60.00	60.00	60.00	60.00	60.00	60.00	60.00	60.00	60.00	60.00	60.00	59.47	55.75
30.0	60.00	60.00	60.00	60.00	60.00	60.00	60.00	60.00	60.00	60.00	59.47	54.89	50.97	47.57	44.60
36.0	60.00	60.00	60.00	60.00	60.00	60.00	60.00	60.00	59.47	54.06	49.56	45.74	42.48	39.64	37.17
42.0	60.00	60.00	60.00	60.00	60.00	60.00	60.00	56.63	50.97	46.34	42.48	39.21	36.41	33.98	31.86
48.0	60.00	60.00	60.00	60.00	60.00	60.00	55.75	49.56	44.60	40.55	37.17	34.31	31.86	29.73	27.88
54.0	60.00	60.00	60.00	60.00	60.00	56.63	49.56	44.05	39.64	36.04	33.04	30.50	28.32	26.43	24.78
60.0	60.00	60.00	60.00	60.00	59.47	50.97	44.60	39.64	35.68	32.44	29.73	27.45	25.49	23.79	22.30
66.0	60.00	60.00	60.00	60.00	54.06	46.34	40.55	36.04	32.44	29.49	27.03	24.95	23.17	21.62	20.27
72.0	60.00	60.00	60.00	59.47	49.56	42.48	37.17	33.04	29.73	27.03	24.78	22.87	21.24	19.82	18.58
78.0	60.00	60.00	60.00	53.81	44.84	38.43	33.63	29.89	26.90	24.46	22.42	20.70	19.22	17.94	16.81
84.0	60.00	60.00	57.99	46.40	38.66	33.14	29.00	25.78	23.20	21.09	19.33	17.84	16.57	15.47	14.50
90.0	60.00	60.00	50.52	40.42	33.68	28.87	25.26	22.45	20.21	18.37	16.84	15.54	14.43	13.47	12.63
96.0	60.00	59.20	44.40	35.52	29.60	25.37	22.20	19.73	17.76	16.15	14.80	13.66	12.69	11.84	11.10
102.0	60.00	52.44	39.33	31.47	26.22	22.48	19.67	17.48	15.73	14.30	13.11	12.10	11.24	10.49	9.83
108.0	60.00	44.55	33.41	26.73	22.27	19.09	16.71	14.85	13.36	12.15	11.14	10.28	9.55	8.91	8.35
114.0	56.82	37.88	28.41	22.73	18.94	16.23	14.20	12.63	11.36	10.33	9.47	8.74	8.12	7.58	7.10
120.0	48.72	32.48	24.36	19.49	16.24	13.92	12.18	10.83	9.74	8.86	8.12	7.49	6.96	6.50	6.09
126.0	42.08	28.05	21.04	16.83	14.03	12.02	10.52	9.35	8.42	7.65	7.01	6.47	6.01	5.61	5.26
132.0	36.60	24.40	18.30	14.64	12.20	10.46	9.15	8.13	7.32	6.65	6.10	5.63	5.23	4.88	4.58
138.0	32.03	21.35	16.02	12.81	10.68	9.15	8.01	7.12	6.41	5.82	5.34	4.93	4.58	4.27	4.00
144.0	28.19	18.79	14.10	11.28	9.40	8.05	7.05	6.26	5.64	5.13	4.70	4.34	4.03	3.76	3.52
150.0	24.94	16.63	12.47	9.98	8.31	7.13	6.24	5.54	4.99	4.53	4.16	3.84	3.56	3.33	3.12
156.0	22.17	14.78	11.09	8.87	7.39	6.34	5.54	4.93	4.43	4.03	3.70	3.41	3.17	2.96	2.77
162.0	19.80	13.20	9.90	7.92	6.60	5.66	4.95	4.40	3.96	3.60	3.30	3.05	2.83	2.64	2.47
168.0	17.75	11.84	8.88	7.10	5.92	5.07	4.44	3.95	3.55	3.23	2.96	2.73	2.54	2.37	2.22
174.0	15.98	10.65	7.99	6.39	5.33	4.57	3.99	3.55	3.20	2.91	2.66	2.46	2.28	2.13	2.00
180.0	14.43	9.62	7.22	5.77	4.81	4.12	3.61	3.21	2.89	2.62	2.41	2.22	2.06	1.92	1.80
186.0	13.08	8.72	6.54	5.23	4.36	3.74	3.27	2.91	2.62	2.38	2.18	2.01	1.87	1.74	1.64
192.0	11.89	7.93	5.95	4.76	3.96	3.40	2.97	2.64	2.38	2.16	1.98	1.83	1.70	1.59	1.49

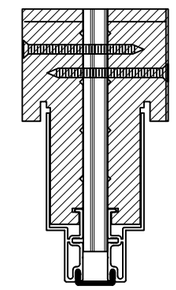

3/4" X 5 3/16" MULLION

NOTE:

1) **MULLION CHART APPLIES TO 3/4" X 5-3/16" MULL ASSEMBLIES, WHEN MULLED IN TWO-WAY CONFIGURATIONS.**
2) **DESIGN PRESSURE VALUES ARE POSITIVE AND NEGATIVE IN PSF.**
3) **MAXIMUM DEFLECTION HAS BEEN LIMITED TO L/175.**
4) **DESIGN PRESSURE OF ASSEMBLY IS LIMITED TO THE LESSER DESIGN PRESSURE OF THE MULLION ASSEMBLY OR THE INDIVIDUAL UNIT OF INSTALLATION. ADJACENT WINDOWS OR DOORS SHALL BE UNDER SEPARATE FL OR MIAMI-DADE APPROVAL.**
5) **MULLION CHART APPLIES TO THE FOLLOWING INSTALLATION CONDITIONS AS LISTED ON SECTION 8.**
6) **TRIBUTARY WIDTH = W = (A+B)/2**
7) **WHEN PRODUCTS ARE STACKED VERTICALLY, THE MANUFACTURER/INSTALLER SHALL ENSURE THAT THE WEIGHT OF UNITS ABOVE WILL NOT CAUSE DEFLECTIONS OR STRESSES WHICH WILL AFFECT OPERATION OR STRUCTURAL ADEQUACY OF UNITS BELOW.**

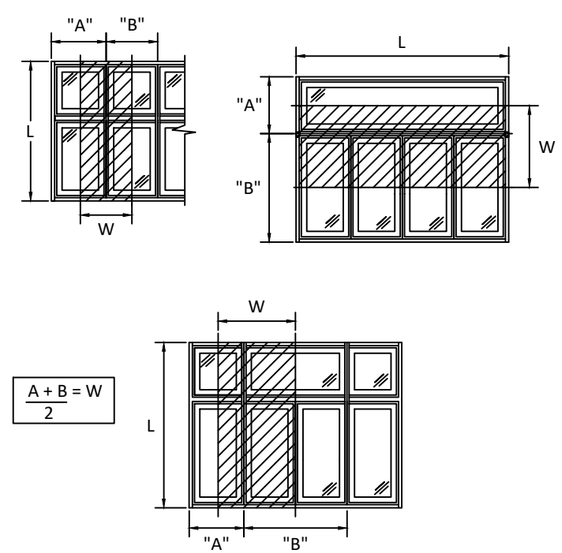

Andersen AW WINDOWS • DOORS
100 FOURTH AVE. NORTH
BAYPORT, MN 55003-1096
PH: (651) 264-5150 FX: (651) 264-5485

TITLE: *E-SERIES HINGED PATIO DOOR - OUTSWING (WZ3)(IMPACT)*
3/4" MULLION LOADS TABLE - TWO WAY

PREPARED BY:
BUILDING DROPS, INC.
398 E. DANIA BEACH BLVD., STE. 338
DANIA BEACH, FL 33004
PH: (954)399-8478
FAX: (954)744.4738
WEB: www.buildingdrops.com

REMARKS	BY	DATE
FBC 17TH EDITION UPDATE	HR	7.2.18
ADDED ZERO, $\frac{1}{2}$", & 1" MULL	HR	4.12.19
ADDED 3/4" X 5-3/16" MULL & DP CHARTS	LL	8.2.19

THE INSTALLATION DETAILS DESCRIBED HEREIN ARE GENERIC AND MAY NOT REFLECT ACTUAL CONDITIONS FOR A SPECIFIC SITE. IF SITE CONDITIONS CAUSE INSTALLATION TO DEVIATE FROM THE REQUIREMENTS DETAILED HEREIN, A LICENSED ENGINEER OR ARCHITECT SHALL PREPARE SITE SPECIFIC DOCUMENTS FOR USE WITH THIS DOCUMENT.

HERMES F. NORERO LICENSE No. 73778 STATE OF FLORIDA PROFESSIONAL ENGINEER

HERMES F. NORERO, P.E.
FLORIDA P.E. No 73778
BUILDING DROPS, INC
398 E. DANIA BEACH BLVD. # 338
DANIA BEACH, FL 33004
FBPE CERT. OF AUTHORIZATION No. 29578

FL #: FL25570
DATE: 10.02.17
DWG. BY: HR
CHK. BY: HFN
SCALE: NTS
DWG. #: AWD231
SECTION 9.5

8/14/2019 6:51 PM
s:\projects\andersen windows\fbc-19-0548.2 - fbc submittal - e-series mullion revisions\dwgs\fl25570.1, .2, .3, & .4\awd231 - fl15254.1-impact - non hvhz new format.dwg

MAXIMUM DESIGN PRESSURE CAPACITY CHART (PSF)
1" X 5-3/16" STRUCTURAL MULLION (ONE-WAY) CONFIGURATION

L - Mull Length (in)	W - Tributary Width (in)														
	24.0	***36.0***	***48.0***	***60.0***	***72.0***	***84.0***	***96.0***	***108.0***	***120.0***	***132.0***	***144.0***	***156.0***	***168.0***	***180.0***	***192.0***
24.0	75.00	75.00	75.00	75.00	75.00	75.00	75.00	75.00	75.00	75.00	75.00	75.00	75.00	75.00	75.00
30.0	75.00	75.00	75.00	75.00	75.00	75.00	75.00	75.00	75.00	75.00	75.00	75.00	75.00	75.00	75.00
36.0	75.00	75.00	75.00	75.00	75.00	75.00	75.00	75.00	75.00	75.00	75.00	75.00	75.00	75.00	75.00
42.0	75.00	75.00	75.00	75.00	75.00	75.00	75.00	75.00	75.00	75.00	75.00	75.00	75.00	75.00	75.00
48.0	75.00	75.00	75.00	75.00	75.00	75.00	75.00	75.00	75.00	75.00	75.00	75.00	75.00	75.00	75.00
54.0	75.00	75.00	75.00	75.00	75.00	75.00	75.00	75.00	75.00	75.00	75.00	75.00	75.00	75.00	75.00
60.0	75.00	75.00	75.00	75.00	75.00	75.00	75.00	75.00	75.00	75.00	75.00	75.00	75.00	75.00	75.00
66.0	75.00	75.00	75.00	75.00	75.00	75.00	75.00	75.00	75.00	75.00	75.00	75.00	75.00	75.00	75.00
72.0	75.00	75.00	75.00	75.00	75.00	75.00	75.00	75.00	75.00	75.00	75.00	75.00	75.00	75.00	75.00
78.0	75.00	75.00	75.00	70.40	67.05	66.65	66.65	66.65	66.65	66.65	66.65	66.65	66.65	66.65	66.65
84.0	75.00	75.00	70.40	61.20	56.08	54.44	54.44	54.44	54.44	54.44	54.44	54.44	54.44	54.44	54.44
90.0	75.00	75.00	61.10	51.93	46.88	44.56	44.27	44.27	44.27	44.27	44.27	44.27	44.27	44.27	44.27
96.0	75.00	68.03	53.03	44.70	39.89	37.31	36.47	36.47	36.47	36.47	36.47	36.47	36.47	36.47	36.47
102.0	75.00	59.93	46.50	38.93	34.42	31.80	30.57	30.41	30.41	30.41	30.41	30.41	30.41	30.41	30.41
108.0	74.63	51.06	39.68	33.25	29.37	27.06	25.83	25.41	25.41	25.41	25.41	25.41	25.41	25.41	25.41
114.0	63.32	43.21	33.46	27.90	24.48	22.37	21.13	20.56	20.47	20.47	20.47	20.47	20.47	20.47	20.47
120.0	54.19	36.90	28.48	23.65	20.64	18.73	17.54	16.90	16.67	16.67	16.67	16.67	16.67	16.67	16.67
126.0	46.74	31.76	24.46	20.23	17.58	15.85	14.74	14.08	13.77	13.72	13.72	13.72	13.72	13.72	13.72
132.0	40.59	27.54	21.16	17.45	15.10	13.55	12.53	11.88	11.52	11.39	11.39	11.39	11.39	11.39	11.39
138.0	35.48	24.04	18.43	15.16	13.08	11.69	10.75	10.12	9.74	9.56	9.53	9.53	9.53	9.53	9.53
144.0	31.20	21.11	16.15	13.26	11.41	10.15	9.29	8.71	8.33	8.12	8.04	8.04	8.04	8.04	8.04
150.0	27.58	18.64	14.24	11.67	10.01	8.88	8.10	7.55	7.19	6.96	6.85	6.83	6.83	6.83	6.83
156.0	24.49	16.54	12.62	10.32	8.83	7.82	7.10	6.60	6.25	6.02	5.89	5.84	5.84	5.84	5.84
162.0	21.86	14.74	11.24	9.18	7.84	6.92	6.27	5.80	5.47	5.24	5.10	5.03	5.02	5.02	5.02
168.0	19.58	13.20	10.05	8.19	6.99	6.16	5.56	5.13	4.82	4.60	4.46	4.37	4.34	4.34	4.34
174.0	17.62	11.86	9.02	7.35	6.26	5.50	4.96	4.56	4.27	4.06	3.92	3.83	3.78	3.77	3.77
180.0	15.91	10.70	8.13	6.62	5.63	4.94	4.44	4.08	3.81	3.61	3.47	3.37	3.31	3.29	3.29
186.0	14.41	9.69	7.36	5.98	5.08	4.45	4.00	3.66	3.41	3.22	3.08	2.99	2.92	2.89	2.89
192.0	13.09	8.80	6.68	5.42	4.60	4.03	3.61	3.30	3.06	2.89	2.76	2.66	2.60	2.56	2.54

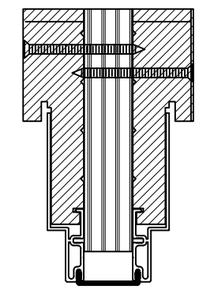

1" X 5 3/16" MULLION

NOTE:

1) **MULLION CHART APPLIES TO 1" X 5-3/16" MULL ASSEMBLIES, WHEN MULLED IN ONE-WAY CONFIGURATIONS.**
2) **DESIGN PRESSURE VALUES ARE POSITIVE AND NEGATIVE IN PSF.**
3) **MAXIMUM DEFLECTION HAS BEEN LIMITED TO L/175.**
4) **DESIGN PRESSURE OF ASSEMBLY IS LIMITED TO THE LESSER DESIGN PRESSURE OF THE MULLION ASSEMBLY OR THE INDIVIDUAL UNIT OF INSTALLATION. ADJACENT WINDOWS OR DOORS SHALL BE UNDER SEPARATE FL OR MIAMI-DADE APPROVAL.**
5) **MULLION CHART APPLIES TO THE FOLLOWING INSTALLATION CONDITIONS AS LISTED ON SECTION 8.**
6) **TRIBUTARY WIDTH = W = (A+B)/2**
7) **WHEN PRODUCTS ARE STACKED VERTICALLY, THE MANUFACTURER/INSTALLER SHALL ENSURE THAT THE WEIGHT OF UNITS ABOVE WILL NOT CAUSE DEFLECTIONS OR STRESSES WHICH WILL AFFECT OPERATION OR STRUCTURAL ADEQUACY OF UNITS BELOW.**

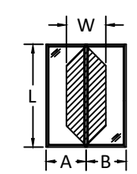

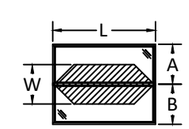

$$\frac{A + B = W}{2}$$

Andersen AW WINDOWS • DOORS
100 FOURTH AVE. NORTH
BAYPORT, MN 55003-1096
PH: (651) 264-5150 FX: (651) 264-5485

TITLE: *E-SERIES HINGED PATIO DOOR - OUTSWING (WZ3)(IMPACT)*

1" MULLION LOADS TABLE - ONE WAY

PREPARED BY:
BUILDING DROPS, INC.
398 E. DANIA BEACH BLVD., STE. 338
DANIA BEACH, FL 33004
PH: (954)399-8478
FAX: (954)744.4738
WEB: www.buildingdrops.com

REMARKS	BY	DATE
FBC 17TH EDITION UPDATE	HR	7.2.18
ADDED ZERO, $\frac{1}{2}$", & 1" MULL	HR	4.12.19
ADDED 3/4" X 5-3/16" MULL & DP CHARTS	LL	8.2.19

THE INSTALLATION DETAILS DESCRIBED HEREIN ARE GENERIC AND MAY NOT REFLECT ACTUAL CONDITIONS FOR A SPECIFIC SITE. IF SITE CONDITIONS CAUSE INSTALLATION TO DEVIATE FROM THE REQUIREMENTS DETAILED HEREIN, A LICENSED ENGINEER OR ARCHITECT SHALL PREPARE SITE SPECIFIC DOCUMENTS FOR USE WITH THIS DOCUMENT.

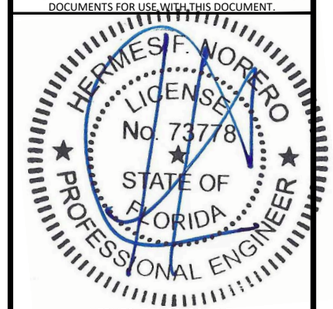

HERMES F. NORERO, P.E.
FLORIDA P.E. No 73778
BUILDING DROPS, INC
398 E. DANIA BEACH BLVD. # 338
DANIA BEACH, FL 33004
FBPE CERT. OF AUTHORIZATION No. 29578

FL #: FL25570

DATE: 10.02.17

DWG. BY: HR | CHK. BY: HFN

SCALE: NTS

DWG. #: AWD231

SECTION 9.6

8/14/2019 6:51 PM
s:\projects\andersen windows\fbc-19-0548.2 - fbc submittal - e-series mullion revisions\dwgs\fl25570.1, 2, 3, & 4\awd231 - fl15254.1-impact - non hvhz new format.dwg

MAXIMUM DESIGN PRESSURE CAPACITY CHART (PSF)
1" X 5-3/16" STRUCTURAL MULLION (TWO-WAY) CONFIGURATION

L - Mull Length (in)	W - Tributary Width (in)														
	24.0	**36.0**	**48.0**	**60.0**	**72.0**	**84.0**	**96.0**	**108.0**	**120.0**	**132.0**	**144.0**	**156.0**	**168.0**	**180.0**	**192.0**
24.0	60.00	60.00	60.00	60.00	60.00	60.00	60.00	60.00	60.00	60.00	60.00	60.00	60.00	59.47	55.75
30.0	60.00	60.00	60.00	60.00	60.00	60.00	60.00	60.00	60.00	60.00	59.47	54.89	50.97	47.57	44.60
36.0	60.00	60.00	60.00	60.00	60.00	60.00	60.00	60.00	59.47	54.06	49.56	45.74	42.48	39.64	37.17
42.0	60.00	60.00	60.00	60.00	60.00	60.00	60.00	56.63	50.97	46.34	42.48	39.21	36.41	33.98	31.86
48.0	60.00	60.00	60.00	60.00	60.00	60.00	55.75	49.56	44.60	40.55	37.17	34.31	31.86	29.73	27.88
54.0	60.00	60.00	60.00	60.00	60.00	56.63	49.56	44.05	39.64	36.04	33.04	30.50	28.32	26.43	24.78
60.0	60.00	60.00	60.00	60.00	59.47	50.97	44.60	39.64	35.68	32.44	29.73	27.45	25.49	23.79	22.30
66.0	60.00	60.00	60.00	60.00	54.06	46.34	40.55	36.04	32.44	29.49	27.03	24.95	23.17	21.62	20.27
72.0	60.00	60.00	60.00	59.47	49.56	42.48	37.17	33.04	29.73	27.03	24.78	22.87	21.24	19.82	18.58
78.0	60.00	60.00	60.00	54.89	45.74	39.21	34.31	30.50	27.45	24.95	22.87	21.11	19.60	18.30	17.15
84.0	60.00	60.00	60.00	50.97	42.48	36.41	31.86	28.32	25.49	23.17	21.24	19.60	18.20	16.99	15.93
90.0	60.00	60.00	58.79	47.03	39.19	33.60	29.40	26.13	23.52	21.38	19.60	18.09	16.80	15.68	14.70
96.0	60.00	60.00	51.67	41.34	34.45	29.53	25.84	22.97	20.67	18.79	17.22	15.90	14.76	13.78	12.92
102.0	60.00	60.00	45.77	36.62	30.51	26.16	22.89	20.34	18.31	16.64	15.26	14.08	13.08	12.21	11.44
108.0	60.00	51.84	38.88	31.11	25.92	22.22	19.44	17.28	15.55	14.14	12.96	11.96	11.11	10.37	9.72
114.0	60.00	44.08	33.06	26.45	22.04	18.89	16.53	14.69	13.22	12.02	11.02	10.17	9.45	8.82	8.27
120.0	56.69	37.79	28.35	22.68	18.90	16.20	14.17	12.60	11.34	10.31	9.45	8.72	8.10	7.56	7.09
126.0	48.97	32.65	24.49	19.59	16.32	13.99	12.24	10.88	9.79	8.90	8.16	7.53	7.00	6.53	6.12
132.0	42.59	28.40	21.30	17.04	14.20	12.17	10.65	9.47	8.52	7.74	7.10	6.55	6.08	5.68	5.32
138.0	37.28	24.85	18.64	14.91	12.43	10.65	9.32	8.28	7.46	6.78	6.21	5.73	5.33	4.97	4.66
144.0	32.81	21.87	16.40	13.12	10.94	9.37	8.20	7.29	6.56	5.97	5.47	5.05	4.69	4.37	4.10
150.0	29.03	19.35	14.51	11.61	9.68	8.29	7.26	6.45	5.81	5.28	4.84	4.47	4.15	3.87	3.63
156.0	25.80	17.20	12.90	10.32	8.60	7.37	6.45	5.73	5.16	4.69	4.30	3.97	3.69	3.44	3.23
162.0	23.04	15.36	11.52	9.22	7.68	6.58	5.76	5.12	4.61	4.19	3.84	3.54	3.29	3.07	2.88
168.0	20.66	13.77	10.33	8.26	6.89	5.90	5.17	4.59	4.13	3.76	3.44	3.18	2.95	2.75	2.58
174.0	18.60	12.40	9.30	7.44	6.20	5.31	4.65	4.13	3.72	3.38	3.10	2.86	2.66	2.48	2.32
180.0	16.80	11.20	8.40	6.72	5.60	4.80	4.20	3.73	3.36	3.05	2.80	2.58	2.40	2.24	2.10
186.0	15.22	10.15	7.61	6.09	5.07	4.35	3.81	3.38	3.04	2.77	2.54	2.34	2.17	2.03	1.90
192.0	13.84	9.23	6.92	5.54	4.61	3.95	3.46	3.08	2.77	2.52	2.31	2.13	1.98	1.85	1.73

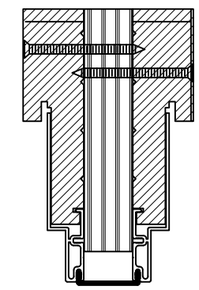

1" X 5 3/16" MULLION

NOTE:

1) MULLION CHART APPLIES TO 1" X 5-3/16" MULL ASSEMBLIES, WHEN MULLED IN TWO-WAY CONFIGURATIONS.
2) DESIGN PRESSURE VALUES ARE POSITIVE AND NEGATIVE IN PSF.
3) MAXIMUM DEFLECTION HAS BEEN LIMITED TO L/175.
4) DESIGN PRESSURE OF ASSEMBLY IS LIMITED TO THE LESSER DESIGN PRESSURE OF THE MULLION ASSEMBLY OR THE INDIVIDUAL UNIT OF INSTALLATION. ADJACENT WINDOWS OR DOORS SHALL BE UNDER SEPARATE FL OR MIAMI-DADE APPROVAL.
5) MULLION CHART APPLIES TO THE FOLLOWING INSTALLATION CONDITIONS AS LISTED ON SECTION 8.
6) TRIBUTARY WIDTH = W = (A+B)/2
7) WHEN PRODUCTS ARE STACKED VERTICALLY, THE MANUFACTURER/INSTALLER SHALL ENSURE THAT THE WEIGHT OF UNITS ABOVE WILL NOT CAUSE DEFLECTIONS OR STRESSES WHICH WILL AFFECT OPERATION OR STRUCTURAL ADEQUACY OF UNITS BELOW.

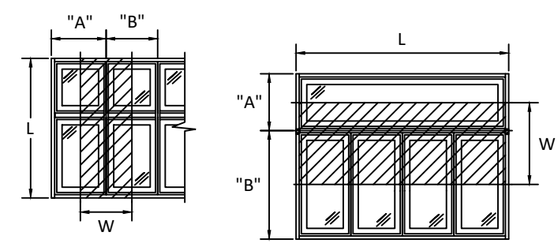

$$\frac{A + B}{2} = W$$

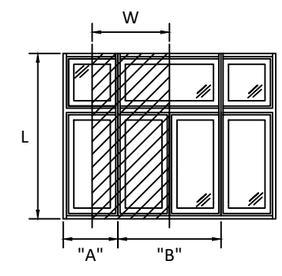

Andersen AW WINDOWS • DOORS
100 FOURTH AVE. NORTH
BAYPORT, MN 55003-1096
PH: (651) 264-5150 FX: (651) 264-5485

TITLE: *E-SERIES HINGED PATIO DOOR - OUTSWING (WZ3)(IMPACT)*

1" MULLION LOADS TABLE - TWO WAY

PREPARED BY:
BUILDING DROPS, INC.
398 E. DANIA BEACH BLVD., STE. 338
DANIA BEACH, FL 33004
PH: (954)399-8478
FAX: (954)744.4738
WEB: www.buildingdrops.com

REMARKS	BY	DATE
FBC 17TH EDITION UPDATE	HR	7.2.18
ADDED ZERO, ½", & 1" MULL	HR	4.12.19
ADDED 3/4" X 5-3/16" MULL & DP CHARTS	LL	8.2.19

THE INSTALLATION DETAILS DESCRIBED HEREIN ARE GENERIC AND MAY NOT REFLECT ACTUAL CONDITIONS FOR A SPECIFIC SITE. IF SITE CONDITIONS CAUSE INSTALLATION TO DEVIATE FROM THE REQUIREMENTS DETAILED HEREIN, A LICENSED ENGINEER OR ARCHITECT SHALL PREPARE SITE SPECIFIC DOCUMENTS FOR USE WITH THIS DOCUMENT.

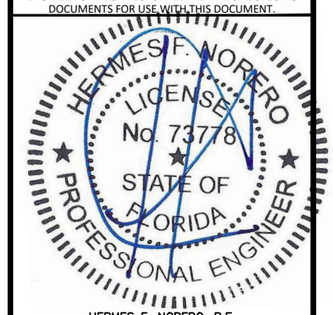

HERMES F. NORERO, P.E.
FLORIDA P.E. No 73778
BUILDING DROPS, INC
398 E. DANIA BEACH BLVD. # 338
DANIA BEACH, FL 33004
FBPE CERT. OF AUTHORIZATION No. 29578

FL #: FL25570

DATE: 10.02.17

DWG. BY: HR | CHK. BY: HFN

SCALE: NTS

DWG. #: AWD231

SECTION 9.7

8/14/2019 6:51 PM
s:\projects\andersen windows\fbc-19-0548.2 - fbc submittal - e-series mullion revisions\dwgs\fl25570.1, .2, .3, & .4\awd231 - fl15254.1-impact - non hvhz new format.dwg

MAXIMUM DESIGN PRESSURE CAPACITY CHART (PSF)
2" X 5-3/16" STRUCTURAL MULLION (ONE-WAY) CONFIGURATION

L - Mull Length (in)	W - Tributary Width (in)														
	24.0	***36.0***	***48.0***	***60.0***	***72.0***	***84.0***	***96.0***	***108.0***	***120.0***	***132.0***	***144.0***	***156.0***	***168.0***	***180.0***	***192.0***
24.0	75.00	75.00	75.00	75.00	75.00	75.00	75.00	75.00	75.00	75.00	75.00	75.00	75.00	75.00	75.00
30.0	75.00	75.00	75.00	75.00	75.00	75.00	75.00	75.00	75.00	75.00	75.00	75.00	75.00	75.00	75.00
36.0	75.00	75.00	75.00	75.00	75.00	75.00	75.00	75.00	75.00	75.00	75.00	75.00	75.00	75.00	75.00
42.0	75.00	75.00	75.00	75.00	75.00	75.00	75.00	75.00	75.00	75.00	75.00	75.00	75.00	75.00	75.00
48.0	75.00	75.00	75.00	75.00	75.00	75.00	75.00	75.00	75.00	75.00	75.00	75.00	75.00	75.00	75.00
54.0	75.00	75.00	75.00	75.00	75.00	75.00	75.00	75.00	75.00	75.00	75.00	75.00	75.00	75.00	75.00
60.0	75.00	75.00	75.00	75.00	75.00	75.00	75.00	75.00	75.00	75.00	75.00	75.00	75.00	75.00	75.00
66.0	75.00	75.00	75.00	75.00	75.00	75.00	75.00	75.00	75.00	75.00	75.00	75.00	75.00	75.00	75.00
72.0	75.00	75.00	75.00	75.00	75.00	75.00	75.00	75.00	75.00	75.00	75.00	75.00	75.00	75.00	75.00
78.0	75.00	75.00	75.00	75.00	75.00	75.00	75.00	75.00	75.00	75.00	75.00	75.00	75.00	75.00	75.00
84.0	75.00	75.00	75.00	75.00	74.33	72.82	72.82	72.82	72.82	72.82	72.82	72.82	72.82	72.82	72.82
90.0	75.00	75.00	75.00	71.36	66.07	63.71	63.43	63.43	63.43	63.43	63.43	63.43	63.43	63.43	63.43
96.0	75.00	75.00	74.33	64.87	59.47	56.63	55.75	55.75	55.75	55.75	55.75	55.75	55.75	55.75	55.75
102.0	75.00	75.00	68.62	59.47	52.85	48.83	46.94	46.69	46.69	46.69	46.69	46.69	46.69	46.69	46.69
108.0	75.00	75.00	60.93	51.05	45.10	41.55	39.66	39.02	39.02	39.02	39.02	39.02	39.02	39.02	39.02
114.0	75.00	66.34	51.38	42.84	37.59	34.34	32.45	31.56	31.43	31.43	31.43	31.43	31.43	31.43	31.43
120.0	75.00	56.65	43.74	36.32	31.70	28.75	26.94	25.94	25.60	25.60	25.60	25.60	25.60	25.60	25.60
126.0	71.76	48.77	37.55	31.07	26.99	24.34	22.64	21.62	21.14	21.06	21.06	21.06	21.06	21.06	21.06
132.0	62.33	42.29	32.49	26.80	23.19	20.81	19.24	18.24	17.68	17.49	17.49	17.49	17.49	17.49	17.49
138.0	54.48	36.91	28.30	23.28	20.08	17.95	16.50	15.54	14.96	14.68	14.64	14.64	14.64	14.64	14.64
144.0	47.90	32.41	24.81	20.36	17.51	15.59	14.27	13.37	12.79	12.46	12.35	12.35	12.35	12.35	12.35
150.0	42.34	28.61	21.87	17.91	15.37	13.64	12.43	11.60	11.03	10.68	10.51	10.49	10.49	10.49	10.49
156.0	37.61	25.39	19.38	15.85	13.57	12.01	10.91	10.13	9.59	9.24	9.04	8.96	8.96	8.96	8.96
162.0	33.56	22.64	17.25	14.09	12.04	10.63	9.63	8.91	8.40	8.05	7.83	7.73	7.71	7.71	7.71
168.0	30.07	20.27	15.43	12.58	10.73	9.45	8.54	7.88	7.40	7.06	6.84	6.71	6.66	6.66	6.66
174.0	27.05	18.22	13.86	11.28	9.61	8.45	7.62	7.01	6.56	6.24	6.01	5.87	5.80	5.79	5.79
180.0	24.42	16.44	12.49	10.16	8.64	7.58	6.82	6.26	5.85	5.54	5.32	5.17	5.09	5.06	5.06
186.0	22.12	14.88	11.30	9.18	7.80	6.83	6.14	5.62	5.23	4.94	4.73	4.59	4.49	4.44	4.44
192.0	20.11	13.51	10.25	8.33	7.06	6.18	5.54	5.06	4.70	4.43	4.23	4.08	3.99	3.93	3.91

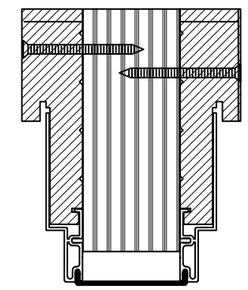

2" X 5 3/16" MULLION

NOTE:

1) **MULLION CHART APPLIES TO 2" X 5-3/16" MULL ASSEMBLIES, WHEN MULLED IN ONE-WAY CONFIGURATIONS.**
2) **DESIGN PRESSURE VALUES ARE POSITIVE AND NEGATIVE IN PSF.**
3) **MAXIMUM DEFLECTION HAS BEEN LIMITED TO L/175.**
4) **DESIGN PRESSURE OF ASSEMBLY IS LIMITED TO THE LESSER DESIGN PRESSURE OF THE MULLION ASSEMBLY OR THE INDIVIDUAL UNIT OF INSTALLATION. ADJACENT WINDOWS OR DOORS SHALL BE UNDER SEPARATE FL OR MIAMI-DADE APPROVAL.**
5) **MULLION CHART APPLIES TO THE FOLLOWING INSTALLATION CONDITIONS AS LISTED ON SECTION 8.**

6) TRIBUTARY WIDTH = W = (A+B)/2

7) WHEN PRODUCTS ARE STACKED VERTICALLY, THE MANUFACTURER/INSTALLER SHALL ENSURE THAT THE WEIGHT OF UNITS ABOVE WILL NOT CAUSE DEFLECTIONS OR STRESSES WHICH WILL AFFECT OPERATION OR STRUCTURAL ADEQUACY OF UNITS BELOW.

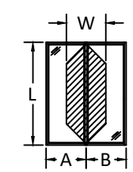

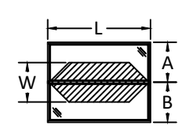

$$\frac{A + B = W}{2}$$

Andersen AW WINDOWS • DOORS

100 FOURTH AVE. NORTH
BAYPORT, MN 55003-1096
PH: (651) 264-5150 FX: (651) 264-5485

TITLE: *E-SERIES HINGED PATIO DOOR - OUTSWING (WZ3)(IMPACT)*

2" MULLION LOADS TABLE - ONE WAY

PREPARED BY:
BUILDING DROPS, INC.
398 E. DANIA BEACH BLVD., STE. 338
DANIA BEACH, FL 33004
PH: (954)399-8478
FAX: (954)744.4738
WEB: www.buildingdrops.com

REMARKS	BY	DATE
FBC 17TH EDITION UPDATE	HR	7.2.18
ADDED ZERO, $\frac{1}{2}$", & 1" MULL	HR	4.12.19
ADDED 3/4" X 5-3/16" MULL & DP CHARTS	LL	8.2.19

THE INSTALLATION DETAILS DESCRIBED HEREIN ARE GENERIC AND MAY NOT REFLECT ACTUAL CONDITIONS FOR A SPECIFIC SITE. IF SITE CONDITIONS CAUSE INSTALLATION TO DEVIATE FROM THE REQUIREMENTS DETAILED HEREIN, A LICENSED ENGINEER OR ARCHITECT SHALL PREPARE SITE SPECIFIC DOCUMENTS FOR USE WITH THIS DOCUMENT.

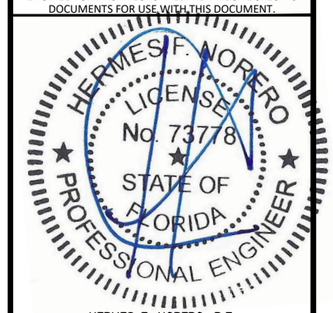

HERMES F. NORERO, P.E.
FLORIDA P.E. No 73778
BUILDING DROPS, INC
398 E. DANIA BEACH BLVD. # 338
DANIA BEACH, FL 33004
FBPE CERT. OF AUTHORIZATION No. 29578

FL #: FL25570

DATE: 10.02.17

DWG. BY: HR | CHK. BY: HFN

SCALE: NTS

DWG. #: AWD231

SECTION 9.8

8/14/2019 6:51 PM
s:\projects\andersen windows\fbc-19-0548.2 - fbc submittal - e-series mullion revisions\dwgs\fl25570.1, .2, .3, & .4\awd231 - fl15254.1-impact - non hvhz new format.dwg

MAXIMUM DESIGN PRESSURE CAPACITY CHART (PSF)
2" X 5-3/16" STRUCTURAL MULLION (TWO-WAY) CONFIGURATION

L - Mull Length (in)	W - Tributary Width (in)														
	24.0	***36.0***	***48.0***	***60.0***	***72.0***	***84.0***	***96.0***	***108.0***	***120.0***	***132.0***	***144.0***	***156.0***	***168.0***	***180.0***	***192.0***
24.0	60.00	60.00	60.00	60.00	60.00	60.00	60.00	60.00	60.00	60.00	60.00	60.00	60.00	59.47	55.75
30.0	60.00	60.00	60.00	60.00	60.00	60.00	60.00	60.00	60.00	60.00	59.47	54.89	50.97	47.57	44.60
36.0	60.00	60.00	60.00	60.00	60.00	60.00	60.00	60.00	59.47	54.06	49.56	45.74	42.48	39.64	37.17
42.0	60.00	60.00	60.00	60.00	60.00	60.00	60.00	56.63	50.97	46.34	42.48	39.21	36.41	33.98	31.86
48.0	60.00	60.00	60.00	60.00	60.00	60.00	55.75	49.56	44.60	40.55	37.17	34.31	31.86	29.73	27.88
54.0	60.00	60.00	60.00	60.00	60.00	56.63	49.56	44.05	39.64	36.04	33.04	30.50	28.32	26.43	24.78
60.0	60.00	60.00	60.00	60.00	59.47	50.97	44.60	39.64	35.68	32.44	29.73	27.45	25.49	23.79	22.30
66.0	60.00	60.00	60.00	60.00	54.06	46.34	40.55	36.04	32.44	29.49	27.03	24.95	23.17	21.62	20.27
72.0	60.00	60.00	60.00	59.47	49.56	42.48	37.17	33.04	29.73	27.03	24.78	22.87	21.24	19.82	18.58
78.0	60.00	60.00	60.00	54.89	45.74	39.21	34.31	30.50	27.45	24.95	22.87	21.11	19.60	18.30	17.15
84.0	60.00	60.00	60.00	50.97	42.48	36.41	31.86	28.32	25.49	23.17	21.24	19.60	18.20	16.99	15.93
90.0	60.00	60.00	59.47	47.57	39.64	33.98	29.73	26.43	23.79	21.62	19.82	18.30	16.99	15.86	14.87
96.0	60.00	60.00	55.75	44.60	37.17	31.86	27.88	24.78	22.30	20.27	18.58	17.15	15.93	14.87	13.94
102.0	60.00	60.00	52.47	41.98	34.98	29.98	26.24	23.32	20.99	19.08	17.49	16.14	14.99	13.99	13.12
108.0	60.00	60.00	49.56	39.64	33.04	28.32	24.78	22.02	19.82	18.02	16.52	15.25	14.16	13.21	12.39
114.0	60.00	60.00	46.95	37.56	31.30	26.83	23.47	20.87	18.78	17.07	15.65	14.45	13.41	12.52	11.74
120.0	60.00	59.07	44.30	35.44	29.53	25.31	22.15	19.69	17.72	16.11	14.77	13.63	12.66	11.81	11.08
126.0	60.00	51.02	38.27	30.61	25.51	21.87	19.13	17.01	15.31	13.92	12.76	11.77	10.93	10.20	9.57
132.0	60.00	44.38	33.28	26.63	22.19	19.02	16.64	14.79	13.31	12.10	11.09	10.24	9.51	8.88	8.32
138.0	58.26	38.84	29.13	23.30	19.42	16.64	14.56	12.95	11.65	10.59	9.71	8.96	8.32	7.77	7.28
144.0	51.27	34.18	25.64	20.51	17.09	14.65	12.82	11.39	10.25	9.32	8.55	7.89	7.32	6.84	6.41
150.0	45.36	30.24	22.68	18.15	15.12	12.96	11.34	10.08	9.07	8.25	7.56	6.98	6.48	6.05	5.67
156.0	40.33	26.89	20.16	16.13	13.44	11.52	10.08	8.96	8.07	7.33	6.72	6.20	5.76	5.38	5.04
162.0	36.01	24.01	18.01	14.40	12.00	10.29	9.00	8.00	7.20	6.55	6.00	5.54	5.14	4.80	4.50
168.0	32.29	21.53	16.14	12.92	10.76	9.23	8.07	7.18	6.46	5.87	5.38	4.97	4.61	4.31	4.04
174.0	29.06	19.37	14.53	11.62	9.69	8.30	7.27	6.46	5.81	5.28	4.84	4.47	4.15	3.87	3.63
180.0	26.25	17.50	13.13	10.50	8.75	7.50	6.56	5.83	5.25	4.77	4.38	4.04	3.75	3.50	3.28
186.0	23.79	15.86	11.90	9.52	7.93	6.80	5.95	5.29	4.76	4.33	3.97	3.66	3.40	3.17	2.97
192.0	21.63	14.42	10.82	8.65	7.21	6.18	5.41	4.81	4.33	3.93	3.61	3.33	3.09	2.88	2.70

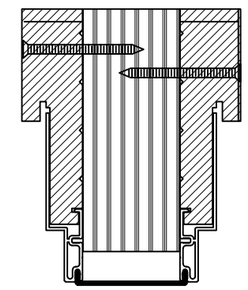

2" X 5 3/16" MULLION

NOTE:

1) **MULLION CHART APPLIES TO 2" X 5-3/16" MULL ASSEMBLIES, WHEN MULLED IN TWO-WAY CONFIGURATIONS.**
2) **DESIGN PRESSURE VALUES ARE POSITIVE AND NEGATIVE IN PSF.**
3) **MAXIMUM DEFLECTION HAS BEEN LIMITED TO L/175.**
4) **DESIGN PRESSURE OF ASSEMBLY IS LIMITED TO THE LESSER DESIGN PRESSURE OF THE MULLION ASSEMBLY OR THE INDIVIDUAL UNIT OF INSTALLATION. ADJACENT WINDOWS OR DOORS SHALL BE UNDER SEPARATE FL OR MIAMI-DADE APPROVAL.**
5) **MULLION CHART APPLIES TO THE FOLLOWING INSTALLATION CONDITIONS AS LISTED ON SECTION 8.**
6) **TRIBUTARY WIDTH = W = (A+B)/2**
7) **WHEN PRODUCTS ARE STACKED VERTICALLY, THE MANUFACTURER/INSTALLER SHALL ENSURE THAT THE WEIGHT OF UNITS ABOVE WILL NOT CAUSE DEFLECTIONS OR STRESSES WHICH WILL AFFECT OPERATION OR STRUCTURAL ADEQUACY OF UNITS BELOW.**

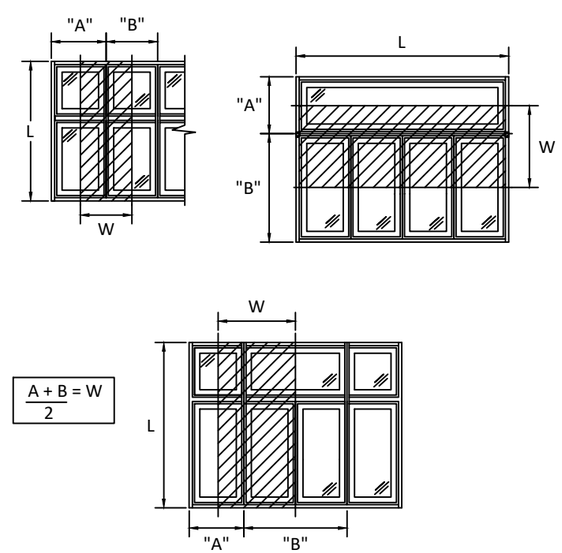

Andersen AW WINDOWS • DOORS
100 FOURTH AVE. NORTH
BAYPORT, MN 55003-1096
PH: (651) 264-5150 FX: (651) 264-5485

TITLE: *E-SERIES HINGED PATIO DOOR - OUTSWING (WZ3)(IMPACT)*

2" MULLION LOADS TABLE - TWO WAY

PREPARED BY:
BUILDING DROPS, INC.
398 E. DANIA BEACH BLVD., STE. 338
DANIA BEACH, FL 33004
PH: (954)399-8478
FAX: (954)744.4738
WEB: www.buildingdrops.com

REMARKS	BY	DATE
FBC 17TH EDITION UPDATE	HR	7.2.18
ADDED ZERO, $\frac{1}{2}$", & 1" MULL	HR	4.12.19
ADDED 3/4" X 5-3/16" MULL & DP CHARTS	LL	8.2.19

THE INSTALLATION DETAILS DESCRIBED HEREIN ARE GENERIC AND MAY NOT REFLECT ACTUAL CONDITIONS FOR A SPECIFIC SITE. IF SITE CONDITIONS CAUSE INSTALLATION TO DEVIATE FROM THE REQUIREMENTS DETAILED HEREIN, A LICENSED ENGINEER OR ARCHITECT SHALL PREPARE SITE SPECIFIC DOCUMENTS FOR USE WITH THIS DOCUMENT.

HERMES F. NORERO LICENSE No. 73778 STATE OF FLORIDA PROFESSIONAL ENGINEER

HERMES F. NORERO, P.E.
FLORIDA P.E. No 73778
BUILDING DROPS, INC
398 E. DANIA BEACH BLVD. # 338
DANIA BEACH, FL 33004
FBPE CERT. OF AUTHORIZATION No. 29578

FL #: FL25570

DATE: 10.02.17

DWG. BY: HR | CHK. BY: HFN

SCALE: NTS

DWG. #: AWD231

SECTION 9.9

8/14/2019 6:51 PM
s:\projects\andersen windows\fbc-19-0548.2 - fbc submittal - e-series mullion revisions\dwgs\fl25570.1, .2, .3, & .4\awd231 - fl15254.1-impact - non hvhz new format.dwg