Chillventa 2026
Halle / hall 4

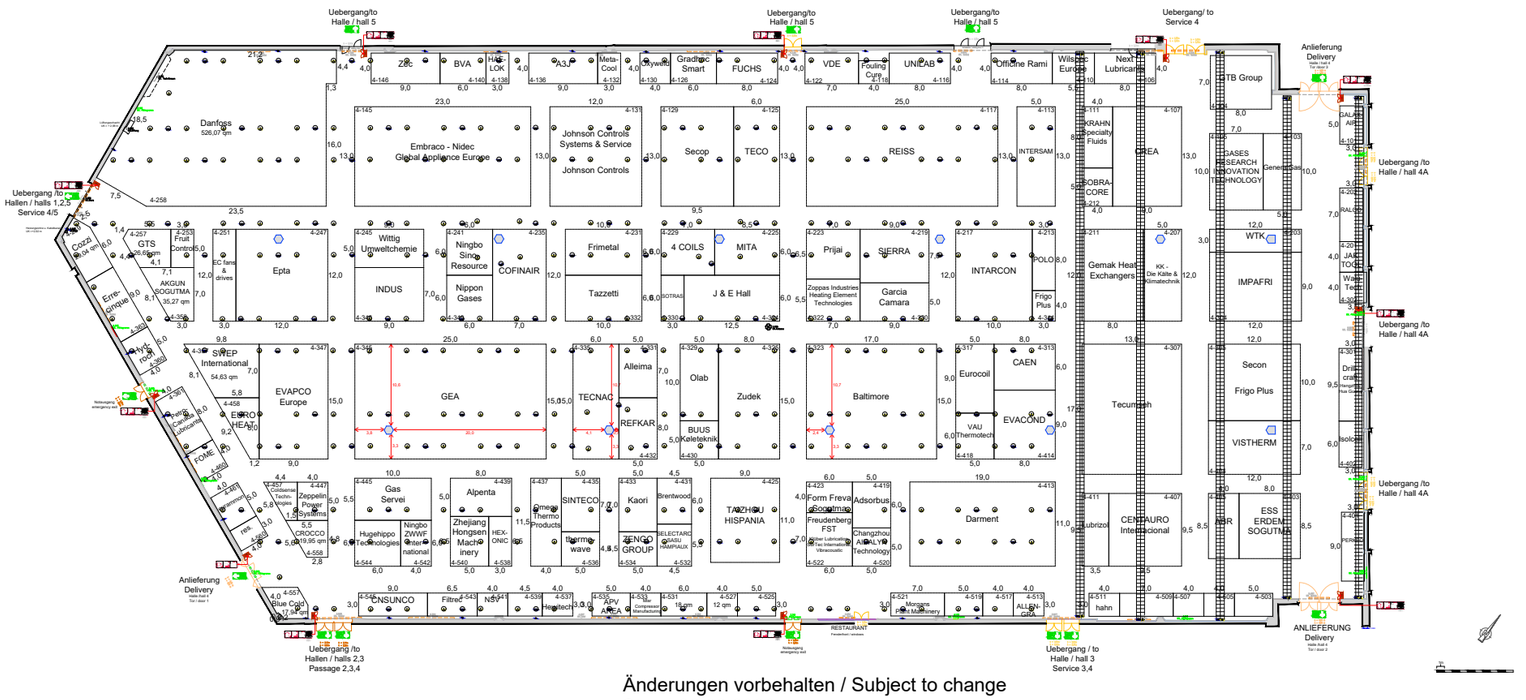
Uebergang/to Halle / hall 5
Uebergang/to Halle / hall 5
Uebergang/to Halle / hall 5
Uebergang/ to Service 4
Anlieferung Delivery
Uebergang /to Halle / hall 4A
Uebergang /to Halle / hall 4A
Uebergang /to Halle / hall 4A
Uebergang /to Halle / hall 4A
Uebergang /to Hallen / halls 1,2,5 Service 4/5
Uebergang /to Halen / halls 2,3 Passage 2,3,4
Uebergang / to Halle / hall 3 Service 3,4
ANLIEFERUNG Delivery
Anlieferung Delivery
RESTAURANT
Danfoss 526,07 qm
Embraco - Nidec Global Appliance Europe
Johnson Controls Systems & Service
Johnson Controls
Secop
TECO
REISS
INTERSAM
KRAHN Specialty Fluids
COBRA-CORE
GEA
Baltimore
Darmerd
Tecumseh
Gemak Heat Exchangers
INTARCON
POLO
Frigo Plus
VISTHERM
Secon
IMPAFRI
WTK
GASES RESEARCH INNOVATION TECHNOLOGY
CTB Group
CENTAURO Internacional
ESS ERDEM SOGUTMA
EVACOND
CAEN
Eurocoil
VAU Thermotech
TECNAC
REFKAR
Alleima
Olab
Zudek
BUUS Kaleteknik
EVAPCO Europe
SWEP International
ESPRO HEAT
Epta
INDUS
Nippon Gases
COFINAIR
Tazzetti
Frimetal
4 COILS
MITA
J & E Hall
Prijai
SIERRA
Garcia Camara
Zoppas Industries Heating Element Technologies
Wittig Umweltchemie
Ningbo Sino Resource
Gas Servei
Alpenta
Zhejiang Hongsen Machinery
Hugehippo ZWWF Technologies
Ningbo ZWWF International
HEX-ONIC
SINTECO
Harmony wave
Omega Thermo Products
Kaori
Brentwood
ZENGO GROUP
SELECTARC
TAZHOU HISPANIA
Form Freva
Adsorbus
Changzhou AIRLYR Technology
Zeppelin Power Systems
CROCCO
CNSUNCO
Filtrec
NSV
Hostech
APV AREA
ALLEN-GAS
Messe Prem Machinery
Cozzi Sterilmatic
GTS
AKGUN SOGUTMA
Erre Sintesi
Hydro rod
Lubricantis
FOME
Blue Cool
Lubrizol
hahn
CAL-AIR
RAU
JAC TOX
Water Tech
Drill crafts
Isolon
PERMA
Lubricantis
Lubrizol
Other Lubricating Gas Internationale Vibracoustic
Messe Prem Machinery
Notausgang / emergency exit
Notausgang / emergency exit
Notausgang / emergency exit
Notausgang / emergency exit
Lüftungsgitter / ventilation grill
Lüftungsgitter / ventilation grill
Lüftungsgitter / ventilation grill